DRG.NO.:-12M-546

A3/2616

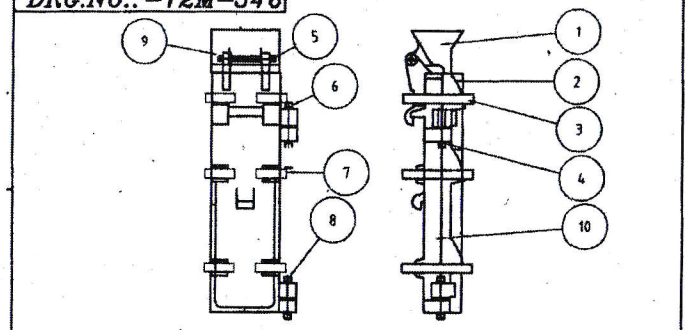

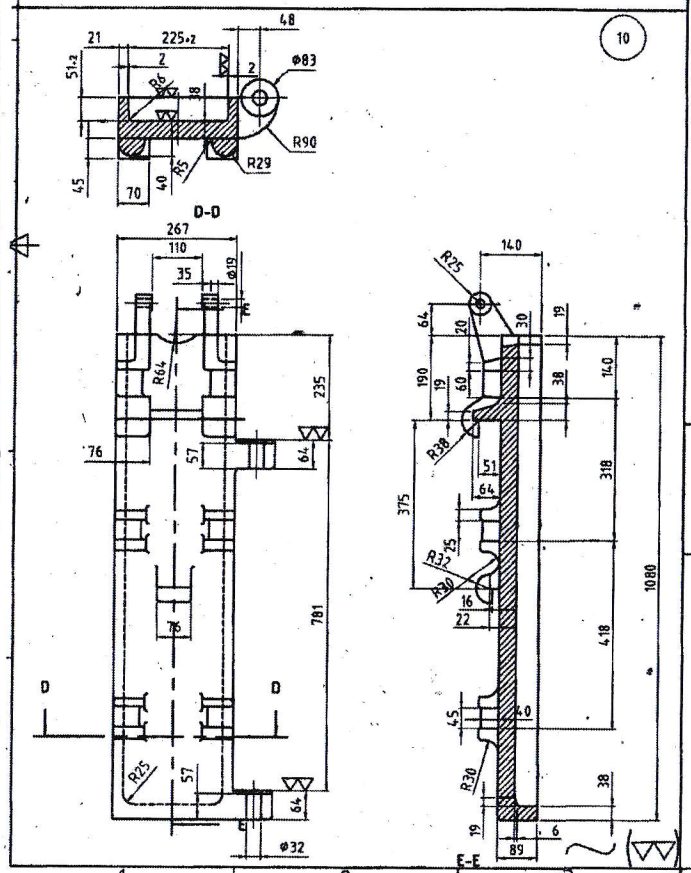

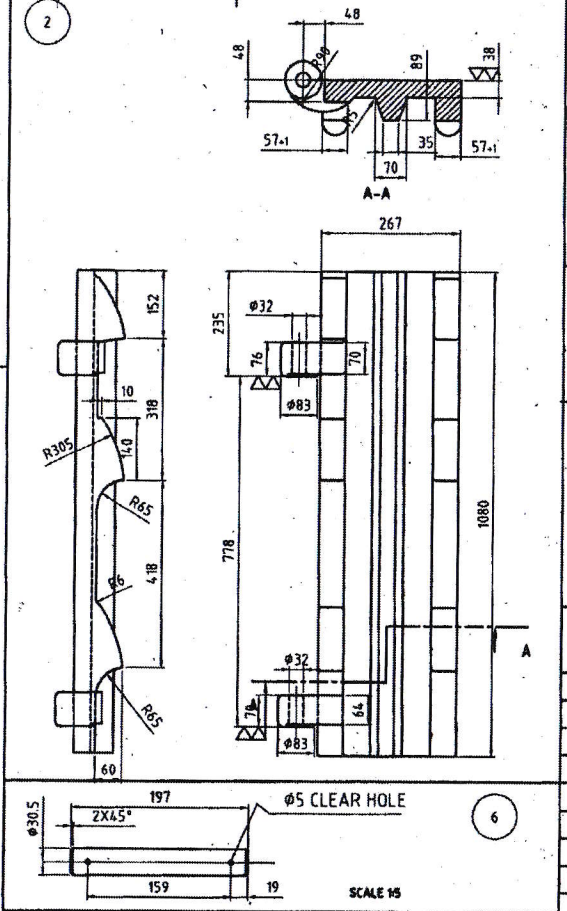

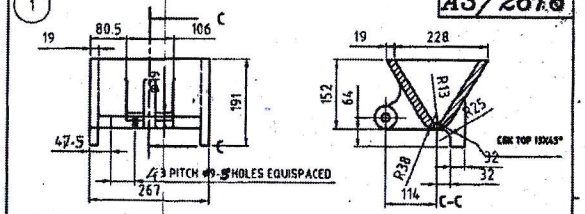

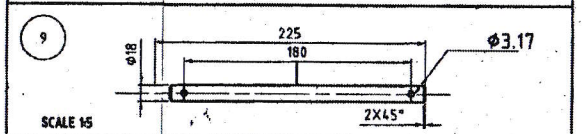

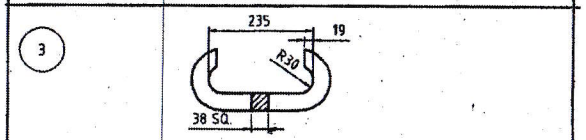

Item	Qty	Description	Material
10	1	MOULD	GREY CAST IRON
9	1	PIN	C-25
8	4	SPLIT PIN (Ø5X50 LONG)	C-55
7	4	WASHER (Ø67XØ32X3THK.)	C-55
6	2	PIN	C-55
5	2	WASHER (Ø41XØ19X3THK.)	C-55
4	4	SPLIT PIN (Ø3X50 LONG)	C-55
3	9	C-CLIP	C-55 IS:1570
2	1	DOOR	GREY CAST IRON
1	1	DOZZLE BOX	GREY CAST IRON

COMPOSITION OF MOULD MATERIAL
C%-2.8 TO 3.5
Si%-1.2 TO 2.0
Mn%- 0.7 TO 1.2
P%- 0.10 TO 0.30
S% -0.05 TO 0.10
THE GREY IRON CASTING SHOULD CONTAIN SLIGHTLY MORE FERRITE THAN PEARLITE AND SHOULD BE FINE GRAINED. THE GRAPHITE FLAKES ARE TO BE SMALL AND UNIFORMLY DISTRIBUTED THROUGHOUT THE MATRIX. THE MOULDS SHOULD BE SUPPLIED IN THE STRESS RELIEVED CONDITION.

NOTES:
1. DIMENSIONS ARE IN mm.
2. RADIUS AT ALL CASTING CORNERS R=3.
3. CASTING SHOULD BE SOUND AND FREE FROM BLOW HOLES.

R.NO.& DATE	DETAILS	INTL.
3194 1-12-17	QUANTITY OF C-CLIP WAS 6Nos.	
3093 07/09/07	IN ITEM NO DOZZLE BOX DIMS. AMENDED.	

REVISION

DRN. S.PATEL
CHKD.
HOS/DO
APPROVED
IWM/MP
JT.GM/Mat.
JT.GM/P&E

ORDNANCE FACTORY KATNI

BOOK TYPE INGOT MOULD OF SIZE 225X51X1020mm

DRG.NO.:-12M-546

SCALE : 1:10 & 1:5 | DATE: 21/11/2006

ALL DIM. IN MM. | A3/2616

INTERNAL USE ONLY