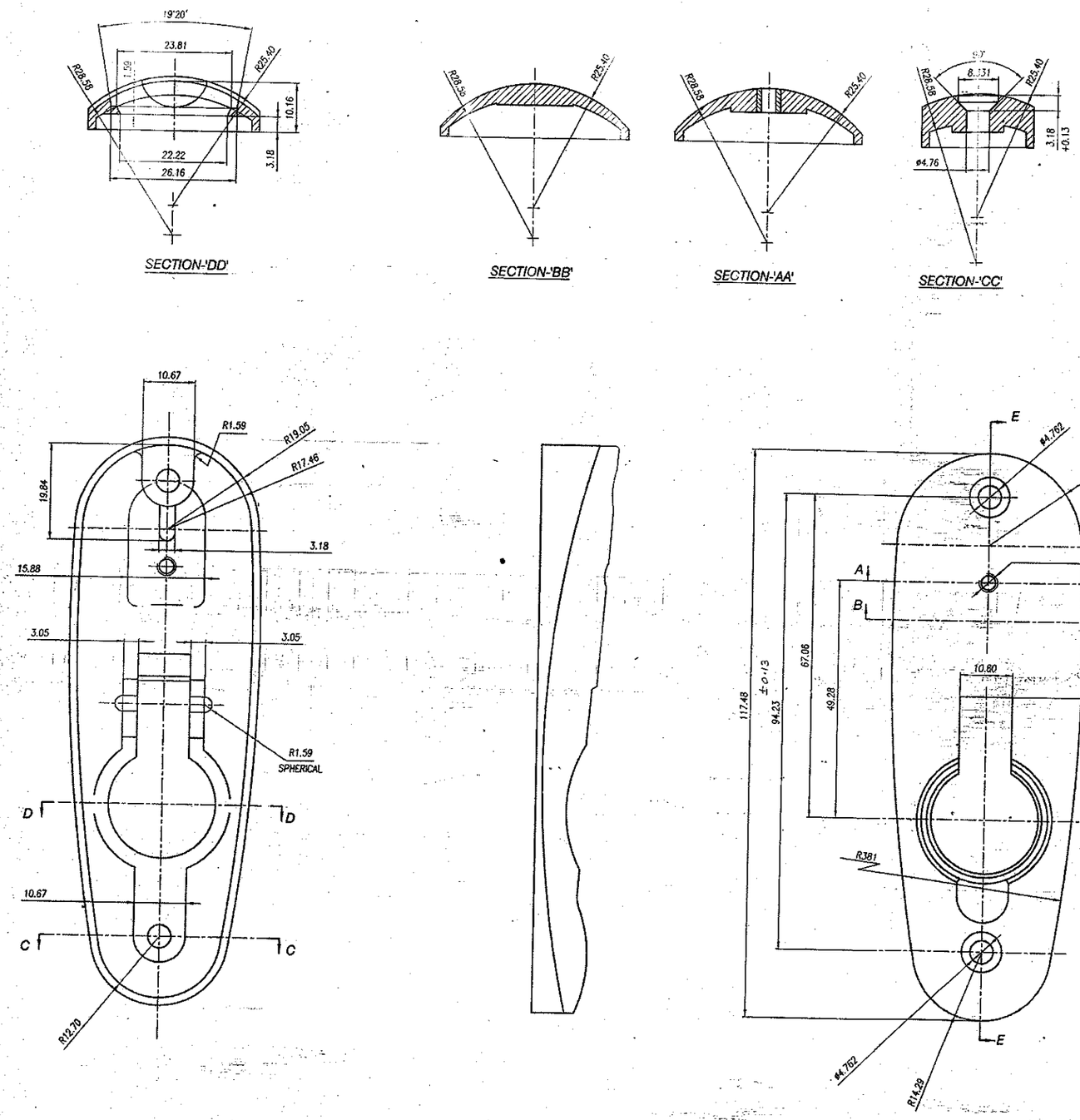

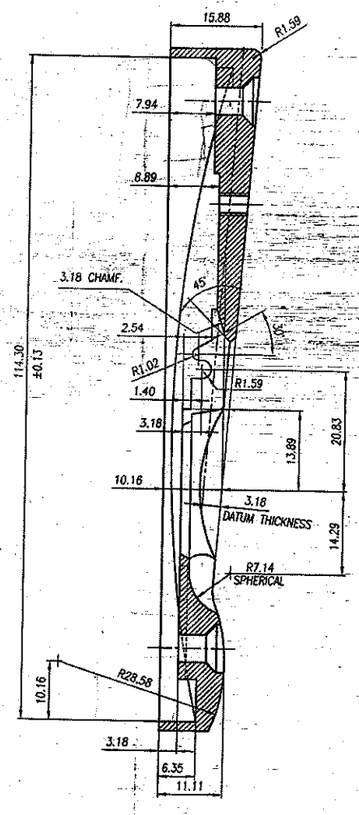

SECTION-'EE'

FOR EXPLANTION SEE D-D NOTE SHEET NO .3 (LATEST ISSUE)

WHERE TOLERENCES ARE NOT SHOWN:-
DIMNS. IN WHOLE NUMBER ±1.27 mm
DIMNS. WITH ONE DECIMAL PLACE ±0.4 mm
DIMNS. WITH TWO DECIMAL PLACE ±0.13 mm

D.SC CAT NO. 1005-001666 AND CONTRACTOR'S CODE MARK TO BE MARKED IN 3 FIGURES IN RAISED LETTERS

NOTE:

INSERT SUITABLY NOTE

i). ALL TEST TO BE CARRIED OUT AS PER PROCEDURE LAID DOWN IN MATERIAL SPECN.

ii). RADIOGRAPHY TEST TO BE CARRIED OUT ON 1% OF EACH LOT/ BATCH OF PRODUCTION WITH THE FOLLOEWING ACCEPTANCE STANDARD AS PER ASTM E-155

a. SHRINKAGE CAVITY - LEVEL 3
b. GAS HOLES - LEVEL 3
c. GAS POROSITY(ALL TYPES) - LEVEL 4
d. SHRINKAGE (ALL TYPES) - LEVEL 4

CERTIFIED CORRECT COPY OF APPROVED DRAWINGS AT THIS DATE 3.1.17

Design & Drawing Office
Ordnance Factory,
Tiruchirappalli-620016.

UN CONTROLLED COPY

MATERIAL:-

BS : 1490 L M 4 M OR 6 M (TO BE CAST BY PRESSURE DIE-CASTING PROCESS)

R 6421

DIMENSIONS ARE IN mm.
IMPORTANT DIMENSIONS MARKED THUS ⊕
INFORMATION MARKED THUS † TO BE MARKED ON SURFACES MARKED TO BE GROUND
UNTOLERATED DIMENSIONS AS PER IS.2102 (MEDIUM)

PART NO.	DESCRIPTION	NO OFF	MATERIAL	TREATMENT	REMARKS
	PLATE BUTT		AS ABOVE		

	SIGNATURE & DATE	SUB: PLATE BUTT FOR: RIFLE 7.62 mm 1A1 & RIFLE 5.56 mm 1B1 (DS.CAT.NO. 1005-001666)	SCALE: 2 : 1
TRACED			STORE NO. ICR 1258
DRAWN	Pusiyararan	DES.REF.NO. ARDE 657/231	
CHECKED			OPERATION NO.
OFFICER/ PRODN.		DRG.NO. TEND-1836*2	
OTC/ D&DO		ORDNANCE FACTORY TIRUCHIRAPPALLI	SHEETS: 1
APPROVED ON 18/10/07			SHEET NO: 1

DA.NO. 2981/16A/7/K
DT. 27.6.07

AMENDMENTS | SIGN. & DATE