HOS/MPM
CERTIFIED COPY OF
LAYOUT/GAUGE SCHEDULE
AT THIS DATE 28/3/18
CDD
RIFLE FACTORY, ISHAPORE

PROVISIONAL

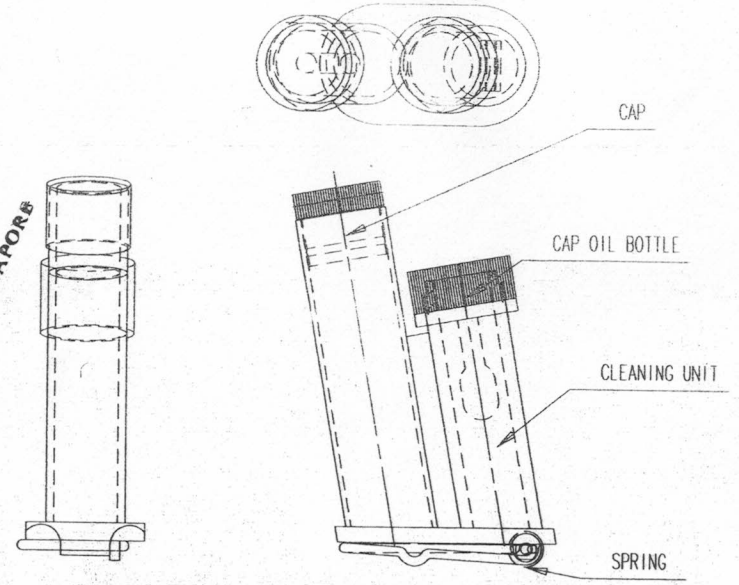

ASSEMBLY CLEANING UNIT

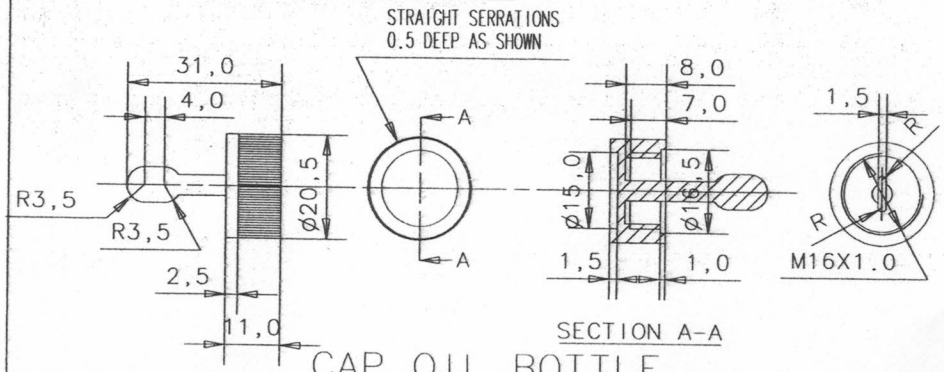

SECTION A-A

CAP OIL BOTTLE

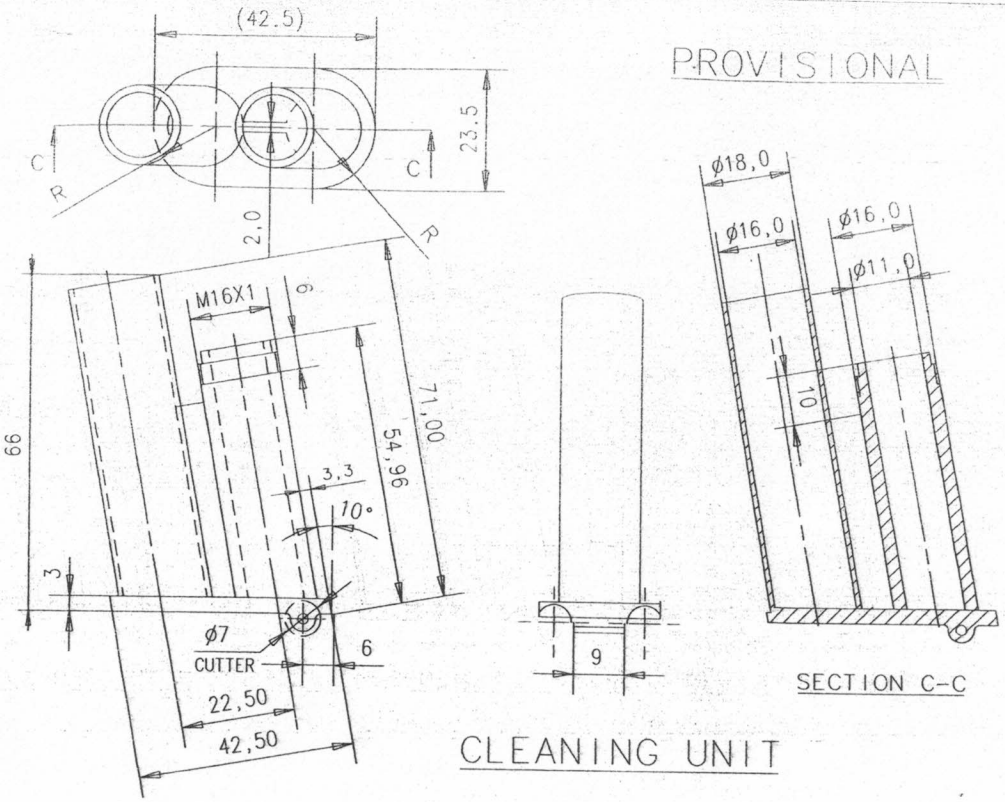

SECTION C-C

CLEANING UNIT

IMPORTANT
NOTE: TO BE SUPPLIED IN ASSEMBLED WITH DRAWING NO. RFI SK 9583

NOTE: TO BE MARKED ON COMPONENT IN 2mm LETTER SIZE

DRAWING UPDATED ON 09-11-2016

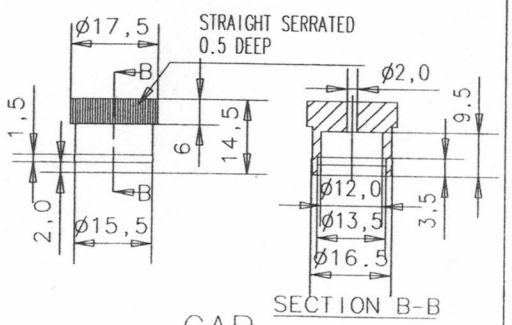

SECTION B-B

CAP

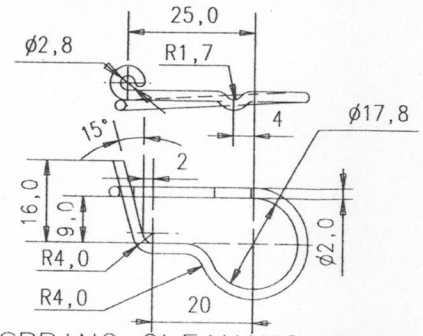

SPRING CLEANING UNIT

MATERIAL: STEEL TO IS 4454 Pt1, 1975 GRADE 4

ASSY. DRG.No. PAG 1000NS		PAG-FOLDABLE BUTT		
MATL.:- TUFLYN ST 635 NYLON		ALL DIMENSIONS ARE IN MILLIMETER.		
TREAT.:- COLOUR BLACK		GENERAL TOLERANCE "MEDIUM" IS:2102		
TITLE OF COMPONENT	OPERATION	2016	NAME	DATE
CLEANING UNIT		DGN.	M M KARMAKAR	24.10.2016
		DRN.		
ORDNANCE FACTORY BOARD RIFLE FACTORY ISHAPORE	SCALE	CKD.		
		APPD.		
12 BORE PUMP ACTION GUN		DRG.NO:- RFI SK 9974		
		SHT NO.-1		NO.OF-1