THIRD ANGLE PROJECTION. DIMENSIONS ARE IN MM.

GENERAL TOLERANCE AS PER IS : 2102-1962 MEDIUM CLASS

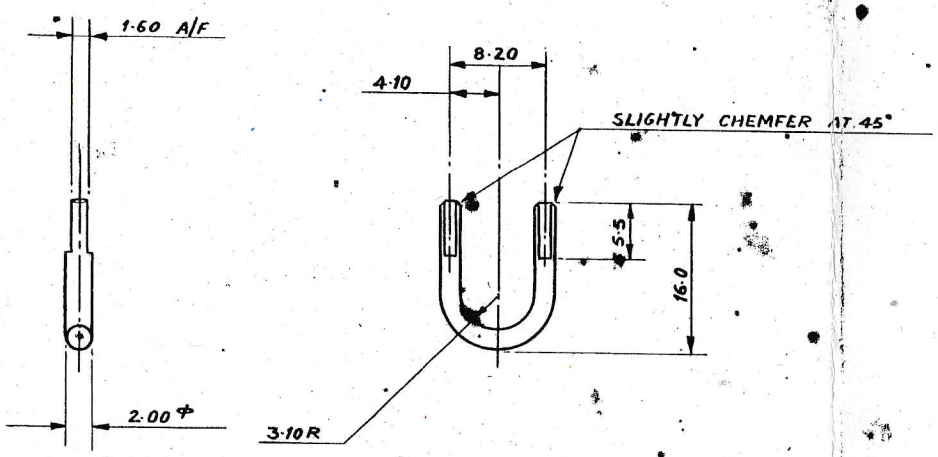

FINISH :- CLEAN

NOTE :- BOTH ARMES SHOULD BE OF EQUAL LENGTH. (*)

1	PIN	1	BRASS TO IS 319	
ITEM NO.	DESCRIPTION	NO. OFF.	MATERIAL	REMARKS

(*)	16·8·90	
GEN. TOLERANCE ADDED	10·3·87	
AMENDMENTS	DATE	SIG.

PIN

GROUP :-

BS 6/10/75
FOR GENERAL MANAGER, O.C.F.

SH. KARNAIL SINGH. 4-2-72.	Rajinder Singh	AKSingh 3-10-75	6/10/75
TRACED.	RETRACED.	CHECKED.	'F' D.O./Q.A.
2:1.		25-9-75.	
SCALE		DATE.	

DRG. NO. O.C.F. SK.566

SHEET No 3/4