THIS DOCUMENT AND THE INFORMATION CONTAINED IN IT ARE PROPRIETARY AND CONFIDENTIAL TO OFT. NO PERSON OR ENTITY IS ALLOWED TO COPY , REPRINT, REPRODUCE OR PUBLISH ANY PART OF THIS DOCUMENT, NOR DISCLOSE ITS CONTENTS TO OTHERS, NOR MAKE ANY USE OF IT, NOR ALLOW OR ASSIST OTHERS TO MAKE ANY USE OF IT UNLESS BY THE PRIOR WRITTEN EXPRESS AUTHORIZATION OF OFT AND THEN ONLY TO THE EXTENT AUTHORIZED.
COPYRIGHT-OFT.

SHEET REV STATUS
ALL SHEETS ARE THE SAME REVISION

REVISION RECORD

REV	ECO	DESCRIPTION		DATE	APVD
01			Freeze	06-Sep-12	
02			Freeze	28-Nov-13	
03			Restricted	19-Jun-14	L. Goldshtein
04	VY57/00		Restricted	16-Sep-14	D. Nave
--		Identical To Previous	Released	09-Apr-18	L. Goldshtein

NOTES :
1. INTERPRET THIS DRAWING IAW ASME Y14.100M.
2. MATERIAL: ALLOY STEEL BAR RND SAE 4130 NORMALIZED PER SAE-AMS-S-6758 OR SAE 4340 NORMALIZED PER SAE-AMS-S-5000.
3. UNLESS OTHERWISE SPECIFIED, UNDEFINED MACHINED FILLET RADII SHALL BE 0.2...0.3.
4. DEBURR AND REMOVE SHARP EDGES, APPROX. 0.2X45 Deg.
5. ALL DIMENSIONS ARE AFTER HEAT TREATMENT AND BEFORE COATING.
6. DEFINED DIMENSIONS ARE AFTER HEAT TREATMENT AND AFTER COATING.
7. GENERAL TOLERANCES ACCORDING TO ISO 2768-m.
8. HEAT TREATMENT TO 35±3 HRC PER AMS 2759/1.
9. COATING: A DRY FILM LUBRICATION IN A FLUOROPOLYMER ORGANIC RESIN CLASS 2 COLOR MATT BLACK TYPE 1; 5-13-MICRON THICK PERVS-1-3-1-165 (OR EQUIVALENT).
   9.1. PROTECT THREADS AFTER PHOSPHATE.
10. QUALITY ASSURANCE PROVISIONS:
    10.1. QUALITY ASSURANCE PROVISIONS FOR THIS ITEM PER RDMQD00012P.
    10.2. MAJOR CHARACTERISTICS NRS 101 TO 102.
11. PARENTHETICAL FIGURES ARE FOR REFERENCE ONLY.
12. PACKAGING AND PACKING: THE FINISHED PART SHALL BE PRESERVED AND PACKAGED IN ACCORDANCE WITH MANUFACTURER'S BEST COMMERCIAL PRACTICE.
13. IDENTIFY PER MIL-STD-130 PARA 4.1.B, BY LABELING ITS CONTAINER WITH THE PART NUMBER. CHARACTERS MINIMUM TEXT HEIGHT 1.25 MM.

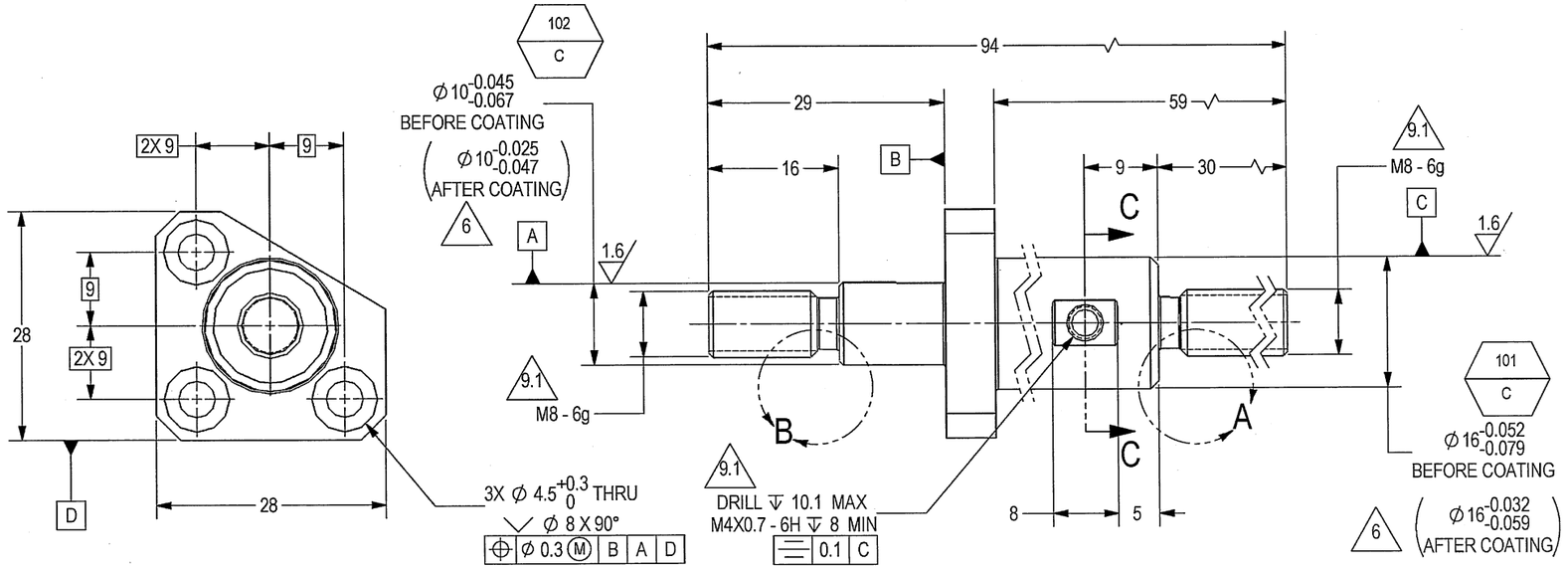

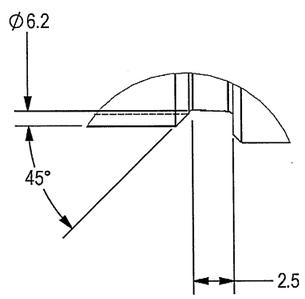

DETAIL B
SCALE 4 : 1

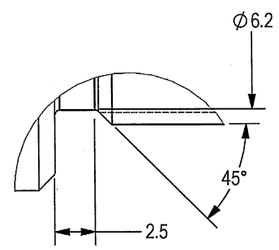

DETAIL A
SCALE 4 : 1

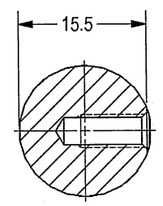

SECTION C-C

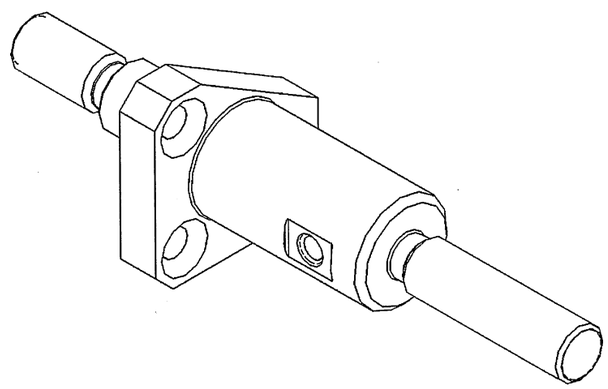

(WEIGHT: 0.095 Kg APPROX.)

SEE ATTACHED MEDIA

3.2 (1.6)

EPDM DRAWING REV.	EPDM MODEL REV.	EPDM MODEL STATUS	EPDM MODEL NAME
		WIP	066426A-00 ROD_LIMITER

UNLESS OTHERWISE SPECIFIED		SIGNATURE	DATE
DIMENSIONS ARE IN MM PER ASME Y14.5M - 1994	DRAWN		10/1/20
TOLERANCES LINEAR SEE NOTE 6 / ANGULAR SEE NOTE 6	CHECKED		
	HOS/DDO		3/9/20
1st. ANGLE PROJECTION	OFFICER/PRODN		
	OFFICER/QC		
PROJECT OFFICER / SURFACE TEXTURE IN Micro Meter	OFFICER/DDO		3/9

ORDNANCE FACTORY
TIRUCHIRAPPALLI

TITLE
ROD LIMITER

FOR: LIMITER ASSY
OF: 12.7MM SRCG

SIZE	CAGE CODE	DWG NO	
C	2291A	066426A-00	--
SCALE 2:1	AUTOMATED DRAWING (SW)	SHEET 1 OF 1	

DWG NO 066426A-00
SH 1

PLM Control