DRAWING NUMBER
20-27-121-1

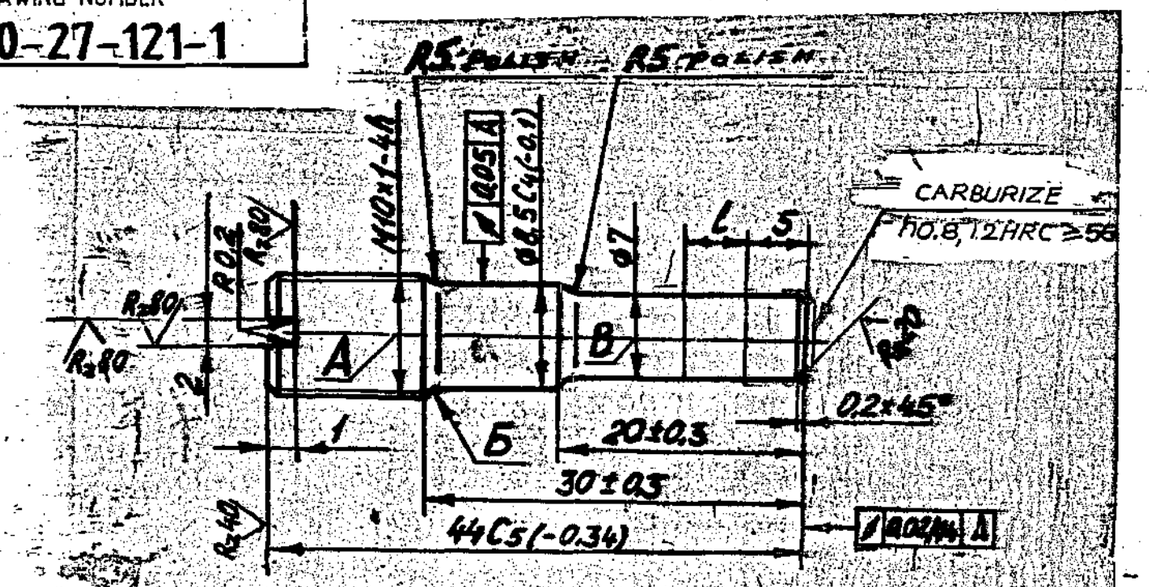

1. INSPECTION GROUP III AS PER TECHNICAL REQUIREMENTS TT-11.
2. CYANIDE (h,0,1 TO 0.2mm) IN THE MANUFACTURED PART, HR 15 N≥86.
3. ADDITIONAL CARBURIZING OF DIAMETER B OVER LENGTH L=5mm IS PERMITTED.
4. UNSPECIFIED LIMIT DEVIATIONS OF DIMENSIONS ARE AS FOLLOWS:
   FOR HOLES – AS PER A_7, FOR SHAFTS – AS PER B_7,
   FOR OTHERS – AS PER C_{m7}
5. IT IS PERMITTED TO MAKE THE THREAD HAVING 60° ANGLE DIAMETER OF 9.35 $^{+0.14}_{-0.07}$ mm.
6. THREAD MAY BE SLIGHTLY BROUGHT ONTO SURFACE Б.
7. COATING CHEMICALLY OXIDIZED, OILED.

8. EXPLANATORY NOTE :-

MATERIAL QUOTED :- 18X2H4MA (18X2H4BA) TO GOST 4543-71

CHROMIUM - NICKEL - MOLYBDENUM, HIGH QUALITY (A) STEEL

a) CHEMICAL COMPOSITION :- %

CARBON	= 0,14 - 0,20
SILICON	= 0,17 - 0,37
MANGANESE	= 0,25 - 0,55
CHROMIUM	= 1,35 - 1,65
NICKEL	= 4,00 - 4,40
MOLYBDENUM	= 0,30 - 0,40
PHOSPHORUS	= 0,025 (MAX)
SULPHUR	= 0,025 (MAX)
COPPER	= 0,30 (MAX)

b) MECHANICAL PROPERTIES :-

ULTIMATE STRENGTH	= 115 Kgf/mm² (MIN)
YIELD POINT	= 85 Kgf/mm² (MIN)
RELATIVE ELONGATION	= 12 % (MIN)
RELATIVE REDUCTION ALONG ACROSS SECTION	= 50 % (MIN)
IMPACT STRENGTH	= 12 Kgfm/Cm² (MIN)

PILOT SAMPLE SHOULD BE APPROVED BY A H S P BEFORE BULK PRODUCTION

EST. WT. 0,021 Kg.

TO BE STAMPED OR MARKED WHERE INDICATED THUS ⫩ (LETTERS)

ALL SHARP EDGES AND CORNERS TO BE REMOVED UNLESS OTHERWISE STATED MACHINED CORNERS TO HAVE R OUT SIDE R INSIDE EQUIVALENT CHAMFERS ARE PERMISSIBLE.

ISSUE	DATE	NATURE OF AMENDMENTS

DRN	
CHD	
TCD	
APPD	
DATE	4-5-87
SCALE:-	2 : 1
DIMENSIONS IN mm	
TOLERANCE ON DIMNS UNLESS OTHERWISE STATED IS:2102-69	
ALL THREADS TO CONFORM TO	

MATERIAL :-18X2H4MA (18X2H4BA) GOST 4543-71

USED ON CБ 20-27-09

CONTROLLERATE OF QUALITY ASSURANCE(HEAVY VEHICLES) AVADI

TITLE STOP

D S CAT NUMBER

DRAWING NUMBER 20-27-121-1

SIZE A3

20-27-122-1

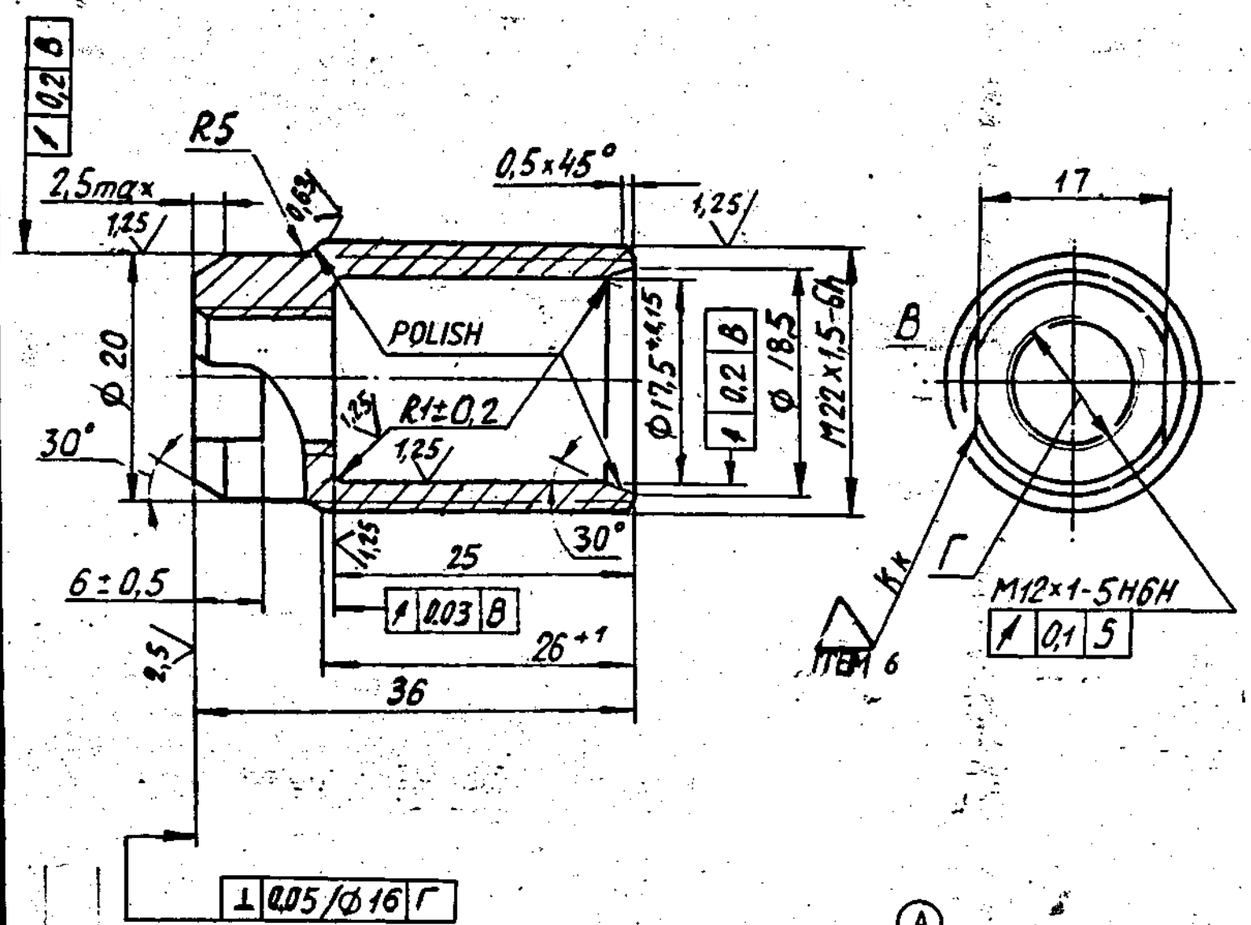

EXPLANATORY NOTE :

7. REFERENCE MATERIAL QUOTED : STEEL ROUND BAR OF DIAMETER 22, ACCURACY CLASS 5, (LIMIT DEVIATION - 0.280) AS PER GOST 7417-75 AND MATERIAL - HIGH QUALITY STEEL (A) TO GRADE 18X2H4MA(18X2H4BA) TO GOST 4543-71.

a) CHEMICAL COMPOSITION :

CARBON	0.14 - 0.20	%
SILICON	0.17 - 0.37	%
MANGANESE	0.25 - 0.55	%
CHROMIUM	1.35 - 1.65	%
NICKEL	4.00 - 4.40	%
MOLYBDENUM	0.30 - 0.40	%
PHOSPHORUS	0.025 % (max)	
SULPHUR	0.025 % (max)	
COPPER	0.30 % (max)	

b) MECHANICAL PROPERTIES :

ULTIMATE STRENGTH	115	Kgf/mm²
YIELD POINT	85	Kgf/mm²
RELATIVE ELONGATION	12	% (min)
RELATIVE REDUCTION ALONG ACROSS SECTION	50	% (min)
IMPACT STRENGTH	12	Kgfm/cm²

* *

22-5 GOST 7417-75
18X2H4MA(18X2H4BA)

(A) EQUIVALENT MATERIAL STEEL
835 M15 (EN39B) TO BS:970

1. INSPECTION GROUP III AS PER TECHNICAL REQUIREMENTS TT-11.
2. CYANIDE ALL OVER h0.1 TO 0.2 mm.
3. UNSPECIFIED LIMIT DEVIATIONS OF DIMENSIONS ARE AS FOLLOWS :
   FOR HOLES - AS PER A7.
   FOR SHAFTS - AS PER B7.
   FOR OTHERS - AS PER CM7.
4. THREAD 'B' MAY BE ROLLED.
5. COATING : CHEMICALLY OXIDIZED, OILED.
6. STAMP MAY BE APPLIED WITH THE ELECTRO-GRAPH.

PILOT SAMPLE SHOULD BE APPROVED BY S.D.S.P BEFORE BULK PRODUCTION

ISSUE	DATE	NATURE OF AMENDMENTS
A	27.8.10	4th Alt Comm, Mtg Minutes Point.No.14 dt.26.10.09

DRN GNPX
CHD
TCD
APPD
DATE 25-04-87

SCALE :- 2 : 1
DIMENSIONS IN mm
TOLERANCE ON DIMNS UNLESS OTHERWISE STATED
ALL THREADS CONFORM TO

EST. MASS 0,031 Kg

TO BE STAMPED OR MARKED WITH INDICATED THUS # (LETTERS)

ALL SHARP EDGES AND CORNERS TO BE REMOVED UNLESS OTHERWISE STATED MACHINED CORNERS TO HAVE R OUTSIDE & INSIDE EQUIVALENT CHAMFERS ARE PERMISSIBLE

MATERIAL :- * * SEE ABOVE

USED ON :- C6 20-27-09

CONTROLLERATE OF INSPECTION (HEAVY VEHICLES FACTORY)

TITLE : NUT

D S CAT NUMBER

DRAWING NUMBER 20-27-122-1

KVD No.-63433

DRAWING NUMBER
20-27-301

RZ 40

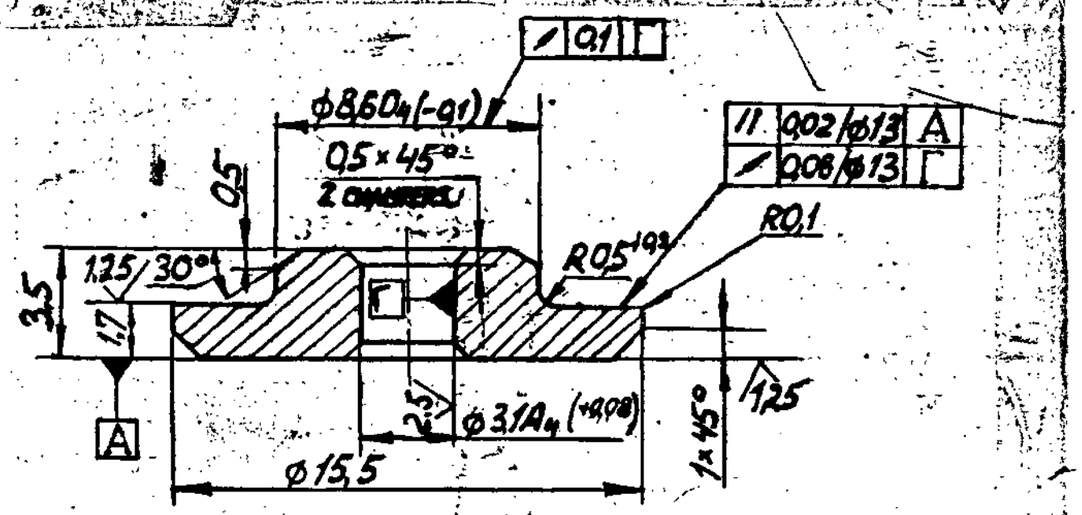

1. INSPECTION GROUP III AS PER TECHNICAL REQUIREMENTS TT-11.

2. CYANIDE ALL OVER (H 0.1 TO 0.2 mm) IN THE MANUFACTURED ARTICLE HR 15 N ≥ 86.

3. UNSPECIFIED LIMIT DEVIATIONS OF DIMENSIONS ARE AS FOLLOWS :-
   SHAFTS - AS PER B7,
   OTHERS - AS PER CM7

4. COATING : CHEMICALLY OXIDIZED, OILED.

5. APPLY STAMP ONTO THE TAG FOR BATCH OF PARTS (24 PES.) AND SEAL BY USING PART 315-141.

6. EXPLANATORY NOTE :-

MATERIAL QUOTED :- 18X2H4MA (18X2H4BA)
TO GOST 4543-71

CHROMIUM - NICKEL - MOLYBDENUM , HIGH QUALITY. STEEL

a) CHEMICAL COMPOSITION (%)

CARBON	=	0,14 - 0,20
SILICON	=	0,17 - 0,37
MANGANESE	=	0,25 - 0,55
CHROMIUM	=	1,35 - 1,65
NICKEL	=	4,00 - 4,40
MOLYBDENUM	=	0,30 - 0,40
PHOSPHORUS	=	0,025 % (MAX)
SULPHUR	=	0,025 % (MAX)
COPPER	=	0,30 % (MAX)

b) MECHANICAL PROPERTIES :-

ULTIMATE STRENGTH	=	115 Kgf/mm² (MIN)
YIELD POINT	=	85 Kgf/mm² (MIN)
RELATIVE ELONGATION	=	12 % (MIN)
RELATIVE ELONGATION ALONG ACROSS SECTION	≡	50 % (MIN)
IMPACT STRENGTH	=	12 Kgfm/Cm² (MIN)

PILOT SAMPLE SHOULD BE APPROVED BY A H S P BEFORE BULK PRODUCTION

EST. WT. 0,0026 Kg.

TO BE STAMPED OR MARKED WHERE INDICATED THUS ⋕ (LETTERS)

ALL SHARP EDGES AND CORNERS TO BE REMOVED UNLESS OTHERWISE STATED MACHINED CORNERS TO HAVE R OUT SIDE & INSIDE EQUIVALENT CHAMFERS ARE PERMISSIBLE.

ISSUE	DATE	NATURE OF AMENDMENTS

DRN	G. Nayphuf
CHD	
TCD	
APPD	
DATE	24-4-87
SCALE :- 5 : 1	

DIMENSIONS IN mm
TOLERANCE ON DIMNS UNLESS OTHERWISE STATED IS:2102-69
ALL THREADS TO CONFORM TO

MATERIAL :- 18X2H4MA (18X2H4BA) GOST 4543-71

USED ON
СБ 20-27-09

CONTROLLERATE OF QUALITY ASSURANCE (HEAVY VEHICLES) AVADI

TITLE
SPRING PLATE

D S CAT NUMBER

DRAWING NUMBER
20-27-301

KVD No.- 63435

SIZE A3

DRAWING NUMBER
20-27-302

Rz 20 (V)

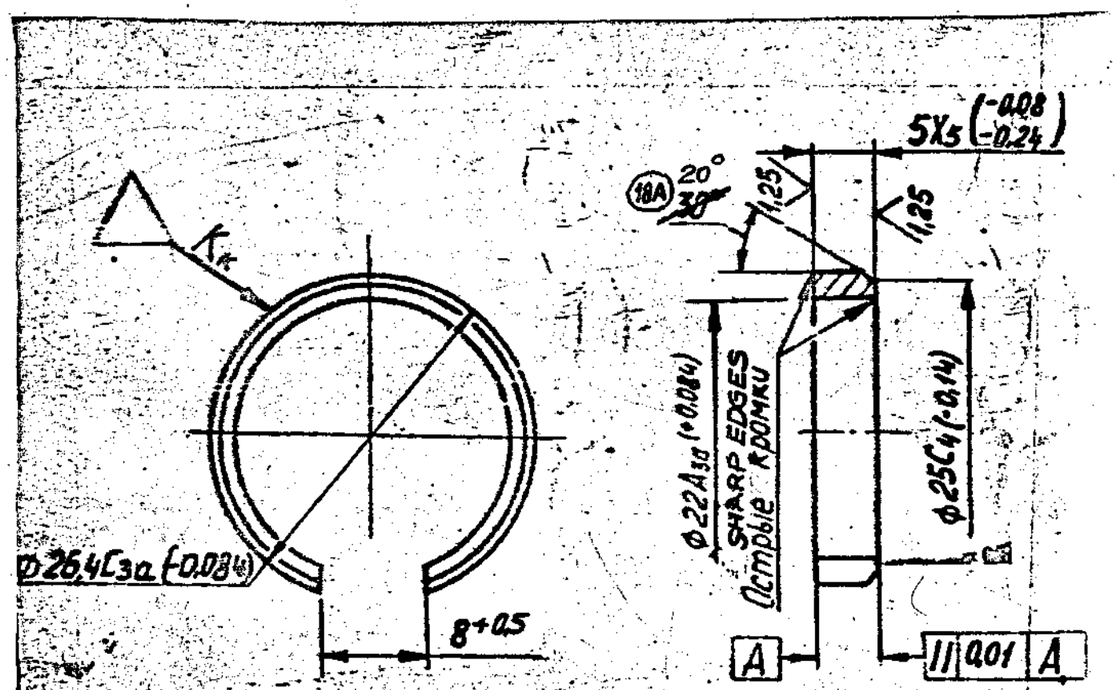

1. INSPECTION GROUP IV AS PER TECHNICAL REQUIREMENTS TT-11.
2. HRC 39 TO 46.
3. DIMENSIONS MAY BE CHECKED BEFORE CUTTING THE RING.
4. COATING : CHEMICALLY OXIDIZED, OILED.

5. EXPLANATORY NOTE :-

MATERIAL QUOTED :- 65G TO GOST 1050-74

a) CHEMICAL COMPOSITION, %

CARBON	= 0,62 - 0,70
SILICON	= 0,17 - 0,37
MANGANESE	= 0,90 - 1,20
CHROMIUM	= 0,25 (MAX)
SULPHUR	= 0,040 (MAX)
PHOSPHORUS	= 0,035 (MAX)
NICKEL	= 0,10 (MAX)
COPPER	= 0,20 (MAX)

b) MECHANICAL PROPERTIES :-

YIELD POINT	= 44 Kgf/mm² (MIN)
ULTIMATE STRENGTH	= 75 Kgf/mm² (MIN)
PERCENTAGE ELONGATION	= 9 (MIN)

(18B) EQUIVALENT MATERIAL
75 C6 TO IS:2507/EN 42 J BS:970

KVD No.- 63436 DRG. INDIANISED BASED ON ORIGINAL ISSUE- 18.

PILOT SAMPLE SHOULD BE APPROVED BY A H S P BEFORE BULK PRODUCTION

EST. WT. 0,0058 Kg.

TO BE STAMPED OR MARKED WHERE INDICATED THUS ⌗ (LETTERS)

ALL SHARP EDGES AND CORNERS TO BE REMOVED UNLESS OTHERWISE STATED MACHINED CORNERS TO HAVE R OUT SIDE R INSIDE EQUIVALENT CHAMFERS ARE PERMISSIBLE

ISSUE	DATE	NATURE OF AMENDMENTS
18B	16-08-10	4th AIT. Comm. Meeting Minutes Point No.12 Dt:26-10-09
18A	6-2-93	AUTHY. Notn. No. 1328-87

DRN		MATERIAL :- 65G TO GOST 1050-74
CHD		USED ON CB 20-27-09
TCD		CONTROLLERATE OF QUALITY ASSURANCE(HEAVY VEHICLES) AVADI
APPD		
DATE	24-4-1987	
SCALE :- 2 : 1		
DIMENSIONS IN mm		TITLE RING
TOLERANCE ON DIMNS UNLESS OTHERWISE STATED IS:2102-69		
ALL THREADS TO CONFORM TO		D S CAT NUMBER
		DRAWING NUMBER 20-27-302

SIZE A3

DRAWING NUMBER
20-27-306

RZ 80 (✓)

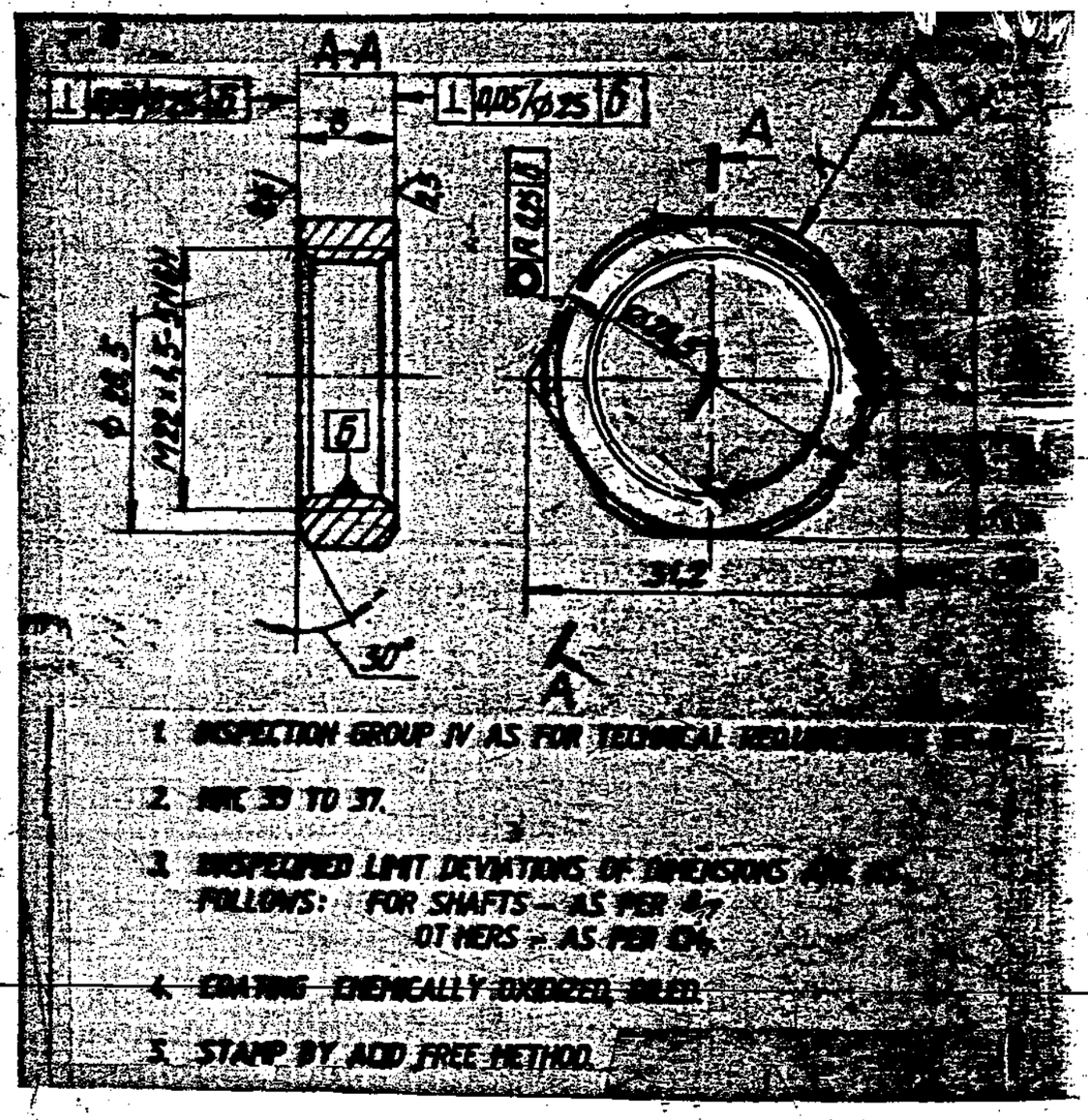

1. INSPECTION GROUP IV AS FOR TECHNICAL REQUIREMENTS
2. HRC 33 TO 37.
3. UNSPECIFIED LIMIT DEVIATIONS OF DIMENSIONS ARE AS FOLLOWS: FOR SHAFTS – AS PER
OTHERS – AS PER
4. COATING CHEMICALLY OXIDIZED, OILED.
5. STAMP BY ACID FREE METHOD.

6. EXPLANATORY NOTE :-

MATERIAL QUOTED :- 18X2H4MA (18X2H4BA) TO GOST 4543-71

CHROMIUM - NICKEL - MOLYBDENUM HIGH QUALITY (A) STEEL

a) CHEMICAL COMPOSITION :- (%)

CARBON	= 0,14 - 0,20
SILICON	= 0,17 - 0,37
MANGANESE	= 0,25 - 0,55
CHROMIUM	= 1,35 - 1,65
MOLYBDENUM	= 0,3 - 0,40
NICKEL	= 4,00 - 4,40
PHOSPHORUS	= 0,025 (MAX)
SULPHUR	= 0,025 (MAX)
COPPER	= 0,30 (MAX)

b) MECHANICAL PROPERTIES :-

ULTIMATE STRENGTH	= 115 Kgf/mm² (MIN)
YIELD POINT	= 85 Kgf/mm² (MIN)
RELATIVE ELONGATION	= 12 % (MIN)
RELATIVE REDUCTION ALONG ACROSS SECTION	= 50 % (MIN)
IMPACT STRENGTH	= 12 Kgfm/Cm² (MIN)

(A) EQUIVALENT MATERIAL STEEL
835 M15 (EN39B) TO BS:970

PILOT SAMPLE SHOULD BE APPROVED BY A H S P BEFORE BULK PRODUCTION

EST. WT. 0,015 Kg.

TO BE STAMPED OR MARKED WHERE INDICATED THUS # (LETTERS)

ALL SHARP EDGES AND CORNERS TO BE REMOVED UNLESS OTHERWISE STATED MACHINED CORNERS TO HAVE R OUT SIDE R INSIDE EQUIVALENT CHAMFERS ARE PERMISSIBLE.

ISSUE	DATE	NATURE OF AMENDMENTS
A	27.8.10	4th ALT. Comm. Meeting Minutes Point No.14 Date 26.10.09

DRN	G. Nanyeshy	MATERIAL :-18X2H4MA (18X2H4BA) GOST 4543-71
CHD		USED ON CБ 20-27-09
TCD	M. Ramaiah	
APPD		CONTROLLERATE OF QUALITY ASSURANCE(HEAVY VEHICLES) AVADI
DATE	24-04-87	
SCALE :- 2 : 1		
DIMENSIONS IN mm TOLERANCE ON DIMNS UNLESS OTHERWISE STATED IS:2102-69		TITLE LOCK NUT
ALL THREADS TO CONFORM TO		D S CAT NUMBER
		DRAWING NUMBER 20-27-306

SIZE A3

KVD No: 63439

DRAWING NUMBER
20-27-313

Rz40 (√)

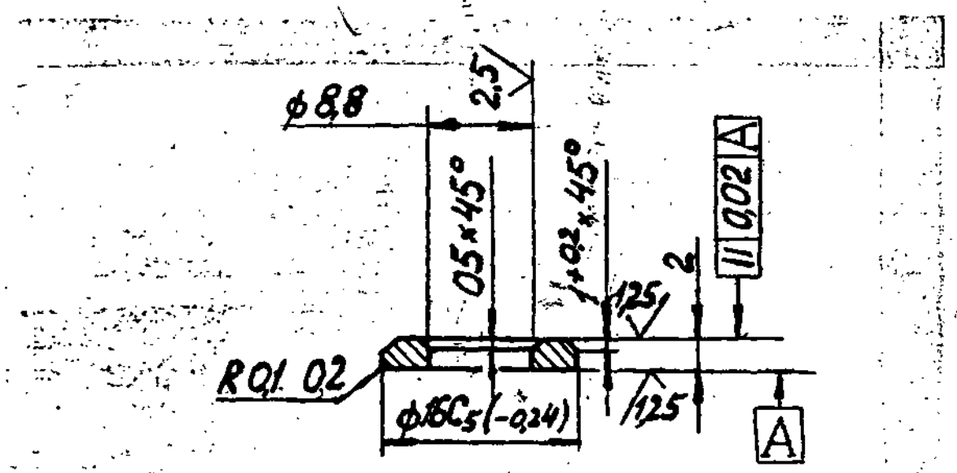

1. INSPECTION GROUP III AS PER TECHNICAL REQUIREMENTS TT-11.
2. CYANIDE, H 0.1 TO 0.2 mm. HR 15N ≥ 85.
3. UNSPECIFIED LIMIT DEVIATIONS OF DIMENSIONS ARE AS FOLLOWS :-
   FOR HOLES - AS PER A7,
   SHAFTS - AS PER B7,
4. COATING : CHEMICALLY OXIDIZED, OILED.
5. APPLY STAMP AS FINAL ACCEPTANCE ON TO THE TAG FOR BATCH OF PARTS AND SEAL.

6. EXPLANATORY NOTE :-

MATERIAL QUOTED :- 18X2H4MA (18X2H4BA) TO GOST 4543-71

CHROMIUM - NICKEL - MOLYBDENUM , HIGH QUALITY (A) STEEL

a) CHEMICAL COMPOSITION : (%)

CARBON	= 0,14 - 0,20
SILICON	= 0,17 - 0,37
MANGANESE	= 0,25 - 0,55
CHROMIUM	= 1,35 - 1,65
NICKEL	= 4,00 - 4,40
MOLYBDENUM	= 0,30 - 0,40
PHOSPHORUS	= 0,025 % (MAX)
SULPHUR	= 0,025 % (MAX)
COPPER	= 0,30 % (MAX)

b) MECHANICAL COMPOSITION :-

ULTIMATE STRENGTH	= 115 Kgf/mm² (MIN).
YIELD POINT	= 85 Kgf / mm² (MIN).
RELATIVE ELONGATION	= 12% (MIN).
RELATIVE STRENGTH ALONG ACROSS SECTION	= 50% (MIN).
IMPACT STRENGTH	= 12 Kgfm/Cm² (MIN).

PILOT SAMPLE SHOULD BE APPROVED BY A H S P BEFORE BULK PRODUCTION

EST. WT. 0,002 Kg,

TO BE STAMPED OR MARKED WHERE INDICATED THUS # (LETTERS)

ALL SHARP EDGES AND CORNERS TO BE REMOVED UNLESS OTHERWISE STATED MACHINED CORNERS TO HAVE R OUT SIDE R INSIDE EQUIVALENT CHAMFERS ARE PERMISSIBLE.

ISSUE	DATE	NATURE OF AMENDMENTS

DRN	G. Nanyalya
CHD	
TCD	
APPD	
DATE	07 - 5 - 87
SCALE :-	2 : 1
DIMENSIONS IN mm	
TOLERANCE ON DIMNS UNLESS OTHERWISE STATED IS:2102-69	
ALL THREADS TO CONFORM TO	

MATERIAL :- 18X2H4MA (18X2H4BA) GOST 4543-71

USED ON СБ 20-27-09

CONTROLLERATE OF QUALITY ASSURANCE(HEAVY VEHICLES) AVADI

TITLE CARRIER RING

D S CAT NUMBER

DRAWING NUMBER 20-27-313

KVD No.- 63440

SIZE A3

DRAWING NUMBER
20-27-314

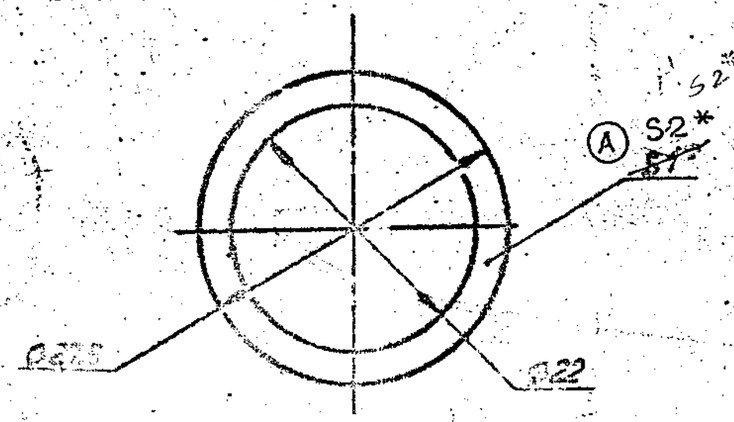

1. REQUIREMENTS PLACED UPON STAMPING ARE AS PER STANDARD 82050-14.
2. DIMENSION IS GIVEN FOR REFERENCE.

3. EXPLANATORY NOTE:-

MATERIAL QUOTED :- SHEET ADIM-1 GOST 21631-76

UNCLADDED ALUMINIUM SHEET TO GRADE ADI ANNEALED (M), THICKNESS 1 mm , NORMAL FINISH AND MANUFACTURING ACCURACY TO GOST 21631-76

CHEMICAL COMPOSITION AS PER GOST 4784-74

ALUMINIUM = 99,30 % (MIN)

IMPURITIES (MAXIMUM)

IRON = 0,30%
SILICON = 0,30%
COPPER = 0,05%
MANGANESE = 0,025%
ZINC = 0,1%
MAGNESIUM = 0,05%
OTHER IMPURITIES EACH INDIVIDUALLY = 0,02%

MECHANICAL PROPERTIES :-

TENSILE STRENGTH = 6 Kgf/mm² (MIN)

PERCENTAGE ELONGATION = 28 (MIN)

AUTHY. 4th ALT. COMM. MTG. MINUTES POINT No. 17 DT 26-10-09

ISSUE	DATE	NATURE OF AMENDMENTS
A	20.8.10	4th Alt. Comm. Meeting Minutes Point No.17 Dt.26.10.09

PILOT SAMPLE SHOULD BE APPROVED BY A H S P BEFORE BULK PRODUCTION

EST. WT. 0,0005 Kg.

TO BE STAMPED OR MARKED WHERE INDICATED THUS # (LETTERS)

ALL SHARP EDGES AND CORNERS TO BE REMOVED UNLESS OTHERWISE STATED MACHINED CORNERS TO HAVE R OUT SIDE & INSIDE EQUIVALENT CHAMFERS ARE PERMISSIBLE

DRN	
CHD	
TCD	
APPD	
DATE	7 - 5 - 87
SCALE :-	2 : 1
DIMENSIONS IN mm TOLERANCE ON DIMNS UNLESS OTHERWISE STATED IS:2102-69	
ALL THREADS TO CONFORM TO	

MATERIAL Ⓐ SHEET ADIM-2 GOST 21631-76

USED ON CB 20-27-09

CONTROLLERATE OF QUALITY ASSURANCE(HEAVY VEHICLES) AVADI

TITLE SEALING RING

D S CAT NUMBER

DRAWING NUMBER 20-27-314

SIZE A3

DRAWING NUMBER
20-27-315

RZ40 (V)

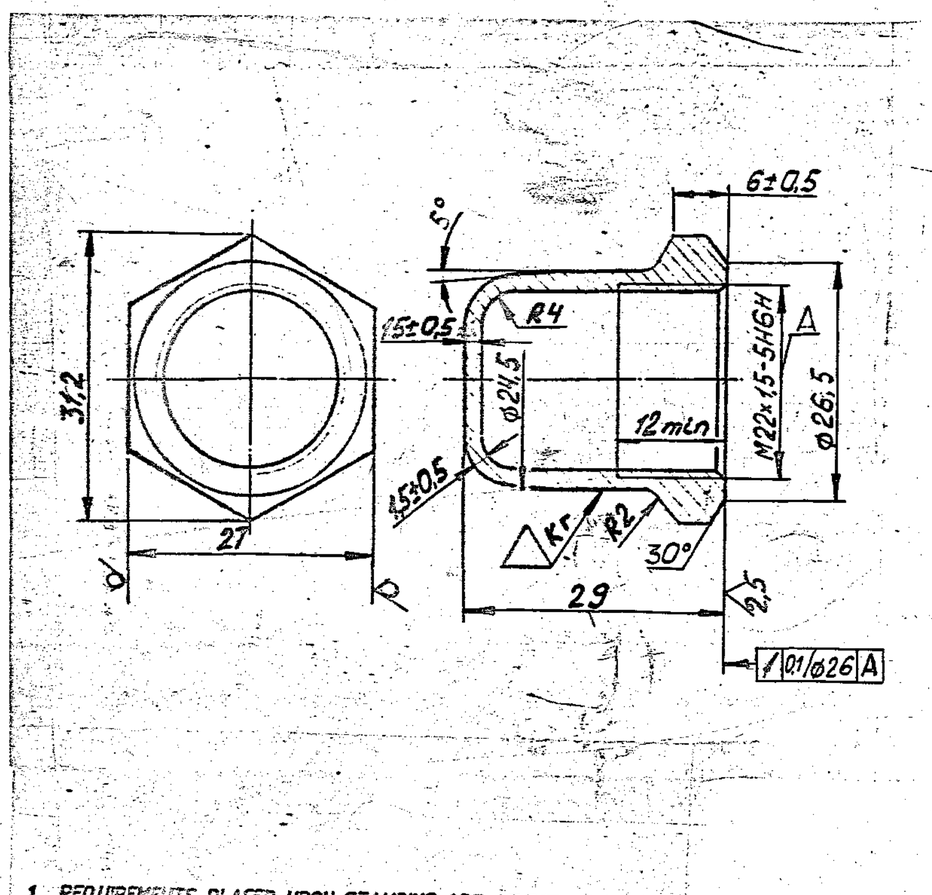

1. REQUIREMENTS PLACED UPON STAMPING ARE AS PER GOST 7505-74 ACCURACY CLASS 2.

2. UNSPECIFIED LIMIT DEVIATIONS OF DIMENSIONS ARE AS FOLLOWS :-
   FOR HOLES - AS ER A7,
   SHAFTS - ASPER B7.

3. COATING : CHEMICALLY OXIDIZED OILED.
   INTERNAL SURFACES MAY HAVE NO COATING.

4. PART MAY BE MADE WITHOUT DRAFT OF 5°.

5. ALTERNATE MATERIAL IS STEEL 30, 35, 40, 20, 50, GOST 1050-74.

6. ROUNDING AS EDGES OF THE HEXAHEDRON UP TO THE DIAMETER OF 28.5 mm IS PERMITTED.

EXPLANATORY NOTE :

7. MATERIAL QUOTED : 27-5 GOST 8560-78
   45 GOST 1050-74

BRIGHT STEEL OF HEXAGONAL CROSS SECTION - 27mm ACROSS FLAT, ACCURACY CLASS - 5 TO GOST 8560-78 AND MANUFACTURED FROM STEEL GRADE 45 TO GOST 1050-74.

ALSO Alt, Mat1 QUOTED - STEEL GRADES 20, 30, 35, 40 & 50. OF GOST 1050-74.

a) CHEMICAL COMPOSITION :

STEEL GRADE	CONTENT OF ELEMENTS %							
	C	Si	Mn	Cr (max)	S	P	Ni	Cu
					MAXIMUM			
45	0.42 - 0.50	0.17 - 0.37	0.50 - 0.80	0.25	0.040	0.035	0.10	0.15
20	0.17 - 0.24	0.17 - 0.37	0.35 - 0.65	0.25	0.040	0.035	0.10	0.15
30	0.27 - 0.35	0.17 - 0.37	0.50 - 0.80	0.25	0.040	0.035	0.10	0.15
35	0.32 - 0.40	0.17 - 0.37	0.50 - 0.80	0.25	0.040	0.035	0.10	0.15
40	0.37 - 0.45	0.17 - 0.37	0.50 - 0.80	0.25	0.040	0.035	0.10	0.15
50	0.47 - 0.55	0.47 - 0.37	0.50 - 0.80	0.25	0.040	0.035	0.10	0.15

b) MECHANICAL PRPERTIES :

STEEL GRADE	YIELD POINT Kgf/mm²	ULTIMATE TENSILE STRENGTH Kgf/mm²	% ELONGATION	REDUCTION OF AREA %	IMPACT STRENGTH Kgfm/cm²
	MINIMUM				
45	36	61	16	40	5
20	25	42	25	55	-
30	30	50	21	50	8
35	32	54	20	45	7
40	34	58	19	45	6
50	38	64	14	40	4

PILOT SAMPLE SHOULD BE APPROVED BY A H S P BEFORE BULK PRODUCTION.

EST. WT.- 0.035 Kg

TO BE STAMPED OR MARKED WHERE INDICATED THUS # (LETTERS)

ALL SHARP EDGES AND CORNERS TO BE REMOVED UNLESS OTHERWISE STATED MACHINED CORNERS TO HAVE R OUTSIDE R INSIDE EQUIVALENT CHAMFERS ARE PERMISSIBLE.

ISSUE	DATE	NATURE OF AMENDMENTS

DRN
CHD
TCD
APPD
DATE 26-04-87
SCALE :- 2 : 1
DIMENSIONS IN mm
TOLERANCE ON DIMNS UNLESS OTHERWISE STATED IS 2102-69
ALL THREADS TO CONFORM TO

MATERIAL :-
27-5 GOST 8560-78
45 GOST 1050-74

USED ON :-
CG 20-27-09

CONTROLLERATE OF QUALITY ASSURANCE (HEAVY VEHICLES)
A V A D I

TITLE
PROTECTIVE CAP

D S CAT NUMBER

DRAWING NUMBER
20-27-315

KVD No.-66744

D-9

SIZE A2

DRAWING NUMBER
20-27-77-5

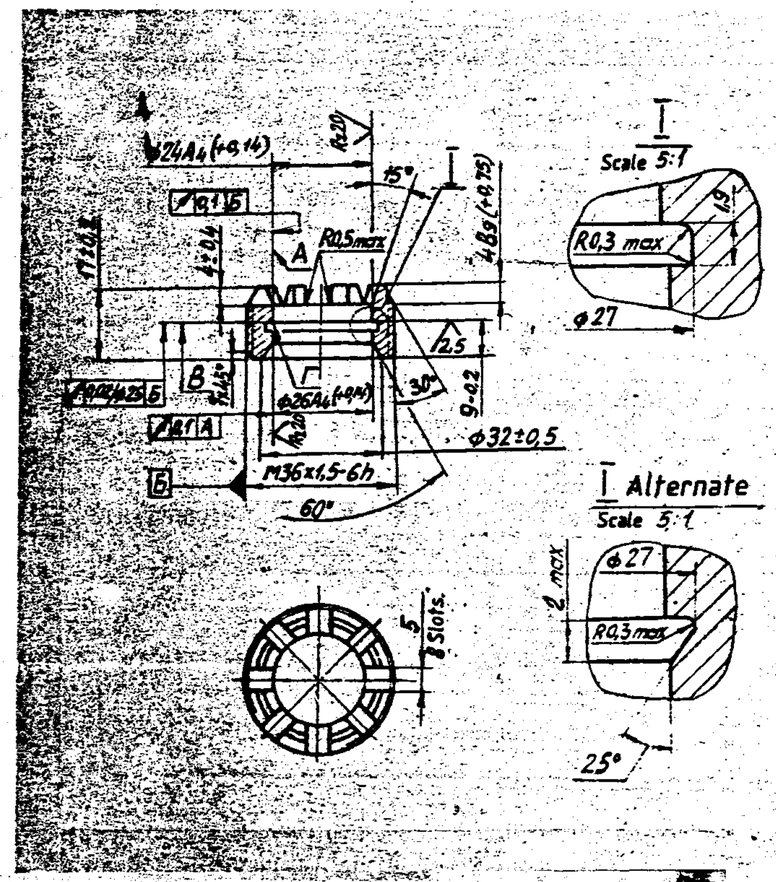

1. Inspection group IV as per Technical Requirements TT-11.
2. Carburize (h 0,1 to 0,2 mm) in the manufactured part. Thread may have no carburized layer.
3. Unspecified limit deviations of dimensions are as follows :- for holes - as per A 7.
4. Edge F should not be blunt.
5. Surface B should be checked by blueing. Imprint should be continuous along the circle.
6. Polish crests of the thread. After polishing the major diameter of thread may be at least 35,7 mm and angle diameter at least 34,781 mm.
7. Coating :- Chemically oxidized, oiled.
8. Apply stamp of final acceptance onto tag 540-551 for batch of 30 parts and seal.

EXPLANATORY NOTE :-

8. REFERENCE MATERIAL QUOTED :-

CHROMIUM - NICKEL MOLYBDENUM STEEL TO GRADE. 18X2HYMA (18X2HYBA) TY 14-1-381-72.

a) CHEMICAL COMPOSITION :

CARBON	=	0.14 - 0.20 %
SILICON	=	0.17 - 0.37 %
MANGANESE	=	0.25 - 0,55 %
CHROMIUM	=	1.35 - 1.65 %
NICKEL	=	4.00 - 4.40 %
MOLYBDENUM	=	0.30 - 0.40 %
SULPHUR	=	0.025% (max)
PHOSPHORUS	=	0.025% (max)

b) MECHANICAL PROPERTIES :

YIELD POINT Kgf/mm²	=	95	(min)
ULTIMATE STRENGTH Kgf/mm²	=	110	(min)
% RELATIVE ELONGATION	=	11	(min)
% RELATIVE REDUCTION ALONG ACROSS SECTION	=	45	(min)
IMPACT STRENGTH Kgfm/cm²	=	9	(min)

(A) EQUIVALENT MATERIAL STEEL
835 M 15 (EN39B) TO BS:970

PILOT SAMPLE SHOULD BE APPROVED BY A H S P BEFORE BULK PRODUCTION.

EST. WT. 0.043 Kg	TO BE STAMPED OR MARKED WHERE INDICATED THUS # (LETTERS)

ALL SHARP EDGES AND CORNERS TO BE REMOVED UNLESS OTHERWISE STATED MACHINED CORNERS TO HAVE R OUTSIDE R INSIDE EQUIVALENT CHAMFERS ARE PERMISSIBLE.

ISSUE	DATE	NATURE OF AMENDMENTS
A	27.8.10	4th ALT. Comm. Meeting Minutes Point No.14 Date 26.10.09

DRN	G Nayak
CHD	
TCD	Naren Patil
APPD	
DATE	25 - 04 - 87
SCALE	1 : 1
DIMENSIONS IN MM.	
TOLERANCE ON DIMNS UNLESS OTHERWISE STATED IS 2102-69	
ALL THREADS TO CONFORM TO	

MATERIAL :- 18X2H4MA (18X2H4BA) TY 14-1-381-72

USED ON :- CБ 20-27-09

CONTROLLERATE OF QUALITY ASSURANCE (HEAVY VEHICLES) A V A D I

TITLE: NUT

D S CAT NUMBER

DRAWING NUMBER 20-27-77-5

KVD No.- 63419

SIZE A2

Восстановленный подлинник №

20-27-77-6А

10

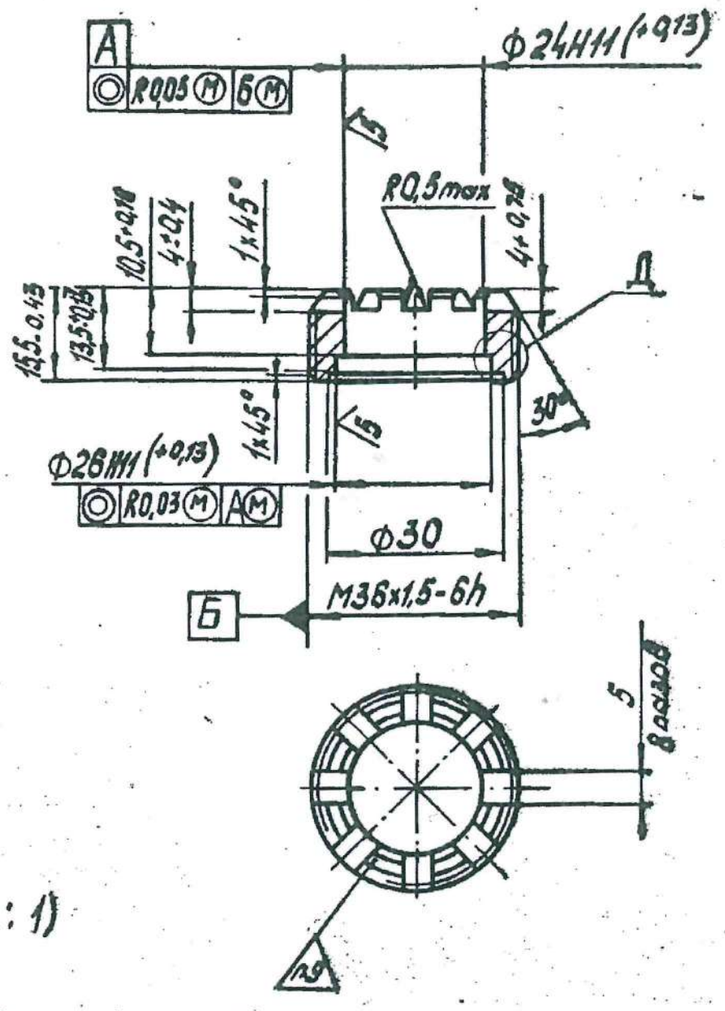

Д (5:1)

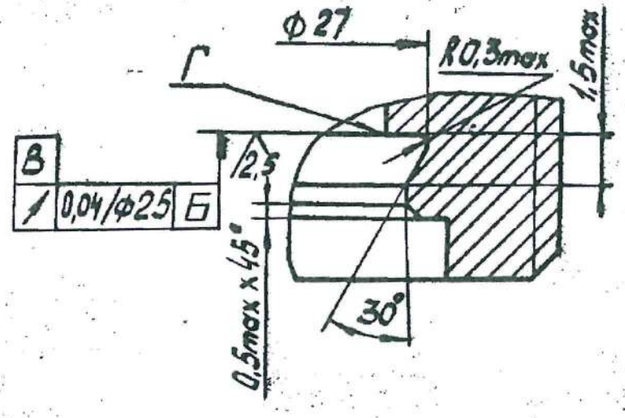

1. Inspection group IV as per Technical Requirements - TT-11

1. Группа контроля IV по ТТ-11.

② 2. 46...51 HRC. 2. HRC (Hardening) 46...51.

3. Неуказанные предельные отклонения размеров: Н14. unspecified limit deviations of dimensions: - H14.

4. Кромка Г не притупляется.

5. Поверхность В проверять по краске, отпечаток должен быть непрерывным по окружности. Контроль производить до термообработки.

6. Вершины резьбы полировать. Допускается наружный диаметр резьбы после полирования 35,7мм не менее, средний диаметр 34,781мм не менее.

7. Покрытие: Хим. Окс. прм.

8. Клеймо окончательной приемки наносить на бирке 540-551 для партии деталей 30штук с опломбированием.

9. Допускается клеймить электроискровым способом.

4. Edge 'Г' should not be blunted.
5. Surface 'B' should be checked by blueing. Imprint should be continuous along the circle. Checking should be carried before ~~heat~~ heat-treatment.
6. Crests of threads are to be polished. After polishing the major diameter is allowed minimum 35.7 mm and angle diameter at least 34.781 mm.
7. Coating :- chemically oxidized, oiled
8. Apply stamp of final acceptance on the tag 540-551 for batch of 30 pieces and seal.
9. Marking is allowed by electric sparks method.

2	1	192-04		17.11.91	
1	1	1077-81	подл.	19.5.92	
Изм.	Лист.	№ докум.	Подп.	Дата	
Разраб.			подп.		
Пров.			подп.		
Т.контр.			подп.		
Зам.Гл.к.			подп.		
Н.контр.			подп.		
Утв.			подп.		

20-27-77-6А

Гайка NUT
М36 x 1,5
GOST

Лит.	Масса	Масшт.
6	0,043	1:1
Лист	Листов 1	

38ХС ГОСТ 4543-71

Формат А2

Инв.№ подл.	Подп. и дата	Взам. инв.№	Инв.№ дубл.	Подп. и дата
82595	подп. 25.02.91			

А 030 № 1011-91

DRAWING NUMBER
20-27-78

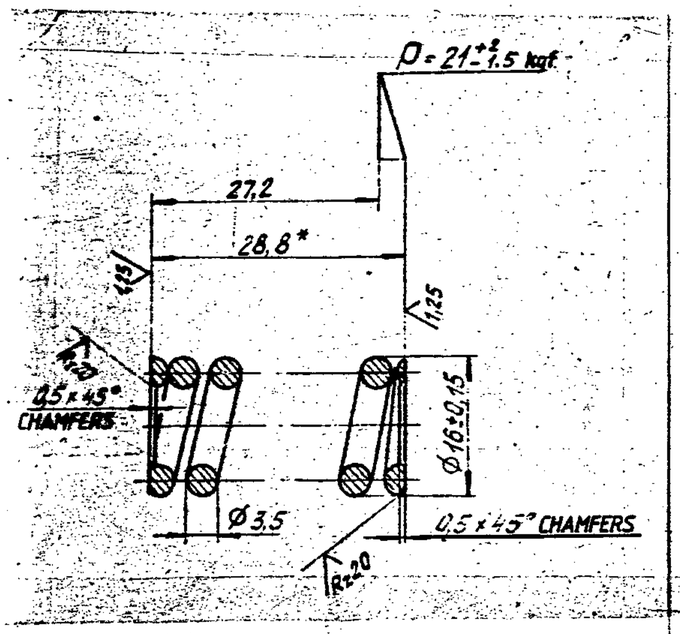

1. INSPECTION GROUP IV AS PER TECHNICAL REQUIREMENTS TT-11.
2. H R C 40 TO 47 SHOULD BE CHECKED ON WORKING AND NON WORKING COILS ON THE SAMPLE PARTS OF THE BATCH.
3. THE LENGTH OF THE UNWOUND SPRING IS L - 320 mm.
4. NUMBER OF WORKING COILS - 5.5 .
5. TOTAL NUMBER OF COILS - 8±0.25.
6. DIRECTION OF SPRING WINDING IS RIGHT HAND.
7. CHECK ON MAGNETIC FLAW DETECTOR AS PER TECHNICAL REQUIREMENTS. TTИВ 20-17. HAIRCRACKS AND BIG CRACKS ARE NOT TOLERATED.
8. WORKING COILS PITCH VARIATION SHOULD NOT EXCEED 0.4 mm.
9. GAP BETWEEN COMPRESSED COILS SHOULD BE UPTO 0.8 mm OVER A LENGTH OF AT LEAST 1/8 OF THE COIL.
10. BEARING SURFACE OF LAST COILS SHOULD BE AT LEAST 0.65 BUT NOT IN EXCESS OF 0.75 OF THE CIRCUMFERENCE LENGTH. THICKNESS OF THE BEARING COIL END IS AT LEAST 0.8 mm.
11. AFTER THE SPRING IS COMPRESSED FOR THREE TIMES WITH A FORCE OF 35 kgf, NO RESIGUAL DEFORMATION SHOULD BE OBSERVED
12. PERFORM SHOT BEASTING ACCORDING TO INSTRUCTIONS И 170-2/61.
13. LAP THE BUTT ENDS AFTER SHORT-BLASTING. CHECK THE BUTT-END FOR STRAIGHTNESS BY PRUSSIAN BLUE FITTING SHOULD BE ATLEAST 90%.
14. * DIMENSIONS ARE GIVEN FOR REFERENCE.
15. COATING : CHEMICALLY OXIDIZED.
16. NON-PARALLELITY OF BEARING BUTT END SHOULD NOT EXCEED 0.1 mm.
17. NON-SQUARENESS OF BUTT ENDS IN RELATION TO THE AXIS OF SPRING SHOULD NOT EXCEED 0.1 mm.

EXPLANATORY NOTE :

18. MATERIAL QUOTED : WIRE 51x ф A-A-П-XH-3.5 TO GOST 14963-78.

MATERIAL GRADE - 51X ф A

SPECIALLY FINISHED SURFACE - A

HIGHER MANUFACTURING ACCURACY - П

PURPOSE - FOR COLD SPRING COILING XH

DIAMETER OF WIRE - 3.5 mm.

MECHANICAL PROPERTIES :

ULTIMATE RUPTURE STRENGTH - 80 Kgf/mm^2 (max)

CHEMICAL COMPOSITION : AS PER GOST 14959-79.

CARBON	-	0.47	TO	0.55 %
SILICON	-	0.15	TO	0.30 %
MANGANESE	-	0.30	TO	0.60 %
CHROMIUM	-	0.75	TO	1.10 %
VANADIUM	-	0.15	TO	0.25 %
SULPHUR	-	0.025 %	(max)	
PHOSPHORUS	-	0.025 %	(max)	

KVD 63420

PILOT SAMPLE SHOULD BE APPROVED BY A H S P BEFORE BULK PRODUCTION.

EST. WT.	TO BE STAMPED OR MARKED WHERE INDICATED THUS # (LETTERS)
0.022 Kg	

ALL SHARP EDGES AND CORNERS TO BE REMOVED UNLESS OTHERWISE STATED MACHINED CORNERS TO HAVE R OUTSIDE R INSIDE EQUIVALENT CHAMFERS ARE PERMISSIBLE.

ISSUE	DATE	NATURE OF AMENDMENTS

DRN
CHD
TCD
APPD
DATE 06-03-87
SCALE :- 2 : 1
DIMENSIONS IN mm.
TOLERANCE ON DIMNS UNLESS OTHERWISE STATED IS 2102-69
ALL THREADS TO CONFORM TO

MATERIAL :- WIRE 51XФA-A-П-XH-3.5 GOST 14963-78

USED ON :- СБ 20-27-09

CONTROLLERATE OF QUALITY ASSURANCE (HEAVY VEHICLES)
A V A D I

TITLE
SPRING OF DELIVERY VALVE

D S CAT NUMBER

DRAWING NUMBER
20-27-78

KVD No 63420

A2

327-52

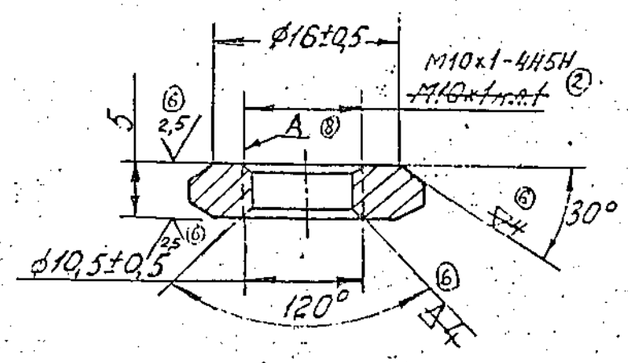

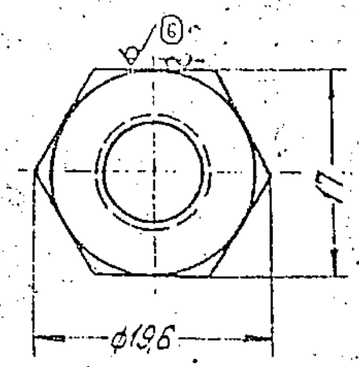

⑧ AFTER HEAT TREATMENT IN CASE OF DECREASE IN DIMENSION OF THREAD A ALONG GO GAUGE, IT IS PERMITTED TO SELECTION TO BE CARRIED OUT WITH PART 327-51-3 OR 327-51-4 AS PER SELECTION.

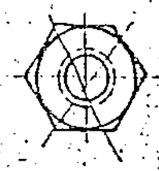

⑧ После термообработки в случае уменьшения размеров резьбы А по проходному калибру, допускается производить комплектовку с отвалью 327-51-3 или 327-51-4 по собираемости.

(8A) EQUIVALENT MATERIAL
EN 36B TO BS: 970/
13 Ni 13 Cr3 TO IS: 4432-1988

1) INSPECTION GROUP III AS PER TECHNICAL REQUIREMENTS II.
2) TO BE CYANIDED ALL OVER TO A DEPTH OF 0,10 ... 2,25 mm HRC ≥ 48.
3) AFTER CYANIDING PITCH DIAMETER OF THREAD MAY BE M10X1 - 5 H 6 H.
4) DIMENSIONS WITH UNSPECIFIED TOLERANCES SHOULD BE MAINTAINED AS PER ACCURACY CLASS 7 OST 1010.
5) TECHNICAL REQUIREMENTS FOR THREAD AS PER STANDARD 82021-00.
6) NON - SQUARENESS OF FACES WITH THE AXIS OF THREAD SHOULD NOT EXCEED 0,1mm AT 136.
7) SHARP EDGES SHOULD BE BLUNTED.
8) COATING : CHEMICAL OXIDIZING, OIL FINISHING. ROLLED STOCK OF CLASS 4 GROUP B GOST 1051-73 MAY BE USED. TO ENSURE HIGH QUALITY HIGH QUALITY OF COATING IT IS ALLOWED TO RECTIFY SURFACE DEFECTS OF ROLLED STOCK WITH DECREASE OF ITS DIMENSIONS AS PER ACCURACY CLASS 5.

** STEEL 12 XH 3A Б 17 (4)
GOST 8560-78
TY 14-1-381-72

1. Группа контроля III. по ТТ-М ⑤
2. Цианировать кругом на глубину 0,10...0,25мм ~~HRC ≥ 48~~ HRC₃ ≥ 49 ④ ⑦
3. После цианирования допускается средний диаметр резьбы ~~М10×1 кл. 2~~ M10x1-5H6H ②
4. Размеры без допусков выполнять по 7 классу точности ОСТ 1010.
5. Технические требования на резьбу выполнять по нормали 82021-00.
6. Неперпендикулярность торцев к оси резьбы не более 0,1мм на ø16.
7. Острые кромки затупить.
8. Покрытие Хим. Окс. прм. ⑨

Допускается использовать прокат 4 класса группы Б ГОСТ 1051-73 ⑦ Для обеспечения качественного покрытия (Р) допускается удалять поверхностные дефекты проката с прокатыванием его размера до 5 класса точности. (A8)

* USED ON :- СБ 20-27-15-1, СБ 20-27-15-2, СБ 20-27-09

PILOT SAMPLE SHOULD BE APPROVED BY A.H.S.P. BEFORE BULK PRODUCTION

			EST. MASS 0.005 Kg	TO BE STAMPED OR MARKED WHERE INDICATED THUS # (LETTERS)
8A	15-7-10	4th ALT. COMM. Mtg. MINUTE POINT No 9 DT 26-10-09	ALL SHARP EDGES AND CORNERS TO BE REMOVED UNLESS OTHERWISE STATED MACHINED CORNERS TO HAVE R OUTSIDE R INSIDE EQUIVALENT CHAMFERS ARE PERMISSIBLE	
ISSUE	DATE	NATURE OF AMENDMENTS	MATERIAL ** SEE ABOVE	USED ON * СБ 327-15-5
DRN		SCALE : 2 : 1	CONTROLLERATE OF QUALITY ASSURANCE (HEAVY VEHICLES) AVADI	
CHD		DIMENSIONS IN mm		
TCD		TOLERANCE ON DIMNS UNLESS OTHERWISE STATED	TITLE TAPPET LOCK NUT	
APPD				
DATE 15-2-88		ALL THREADS TO CONFORM TO	D S CAT NUMBER	DRAWING NUMBER 327-52

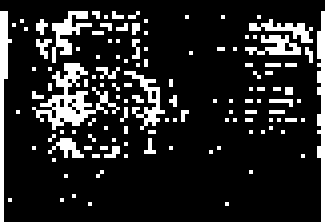

CD 20-27-09

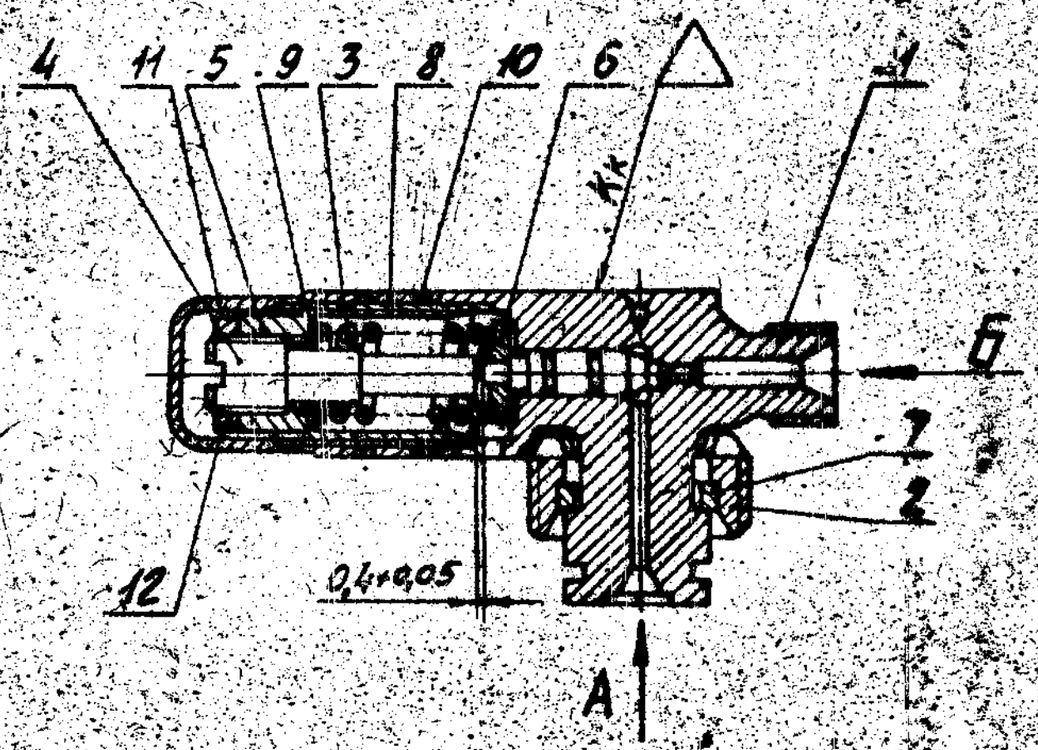

1 BEFORE ASSEMBLY, PARTS SHOULD CAREFULLY BE WASHED IN FILTERED GASOLINE.

2 ADJUST THE COMPRESSION OF SPRING (REF.NO.3) TO PROVIDE FOR PRESSURE REQUIRED TO OPEN THE VALVE A (9,8 ± 0,5 MPa OR 100 ± 5 kgf/cm²) IN CASE OF ATMOSPHERIC PRESSURE APPLIED FROM SIDE Б .

3 THE ASSEMBLED DELIVERY VALVE SHOULD BE RUN-IN TOGETHER WITH TECHNOLOGICAL FUEL PUMP FOR 2 HOURS AT n = 1300 ± 50 REVOLUTION/MINUTE AND THE RACK OUT COME OF 10 mm.

4 THE STOP NUT SHOULD BE ASSEMBLED WITH THE BODY AND THE STOP MANUALLY. JAMMING IS NOT PERMITTED. SELECTION IS ACCEPTABLE.

5 AFTER RUNNING-IN THE DELIVERY VALVE SHOULD BE FINALLY ADJUSTED AND CHECKED. THE PRESSURE TO OPEN THE VALVE FROM SIDE A SHOULD BE EQUAL TO 7,3 ± 0,5 MPa (A) (A) (75 ± 5 kgf/cm²) AND FROM SIDE Б WITHIN THE LIMITS OF 9,8 TO 13,2 MPa (100 TO 133 kgf/cm²). THERE SHOULD BE A SHARP SOUND WHILE OPENING THE VALVE.

6 THE CONE AIR-TIGHTNESS SHOULD BE CHECKED FOR 40 SECOND (A) FROM SIDE Б UNDER 7,8 TO 9,8 MPa (80 TO 100 kgf/cm²) PRESSURE.

PILOT SAMPLE SHOULD BE APPROVED BY A H S P BEFORE BULK PRODUCTION

		EST. MASS 0,433 Kg	TO BE STAMPED OR MARKED WHERE INDICATED THUS LETTERS!
A	17-2-86	Authy Notn.No 1671-81.	ALL SHARP EDGES AND CORNERS TO BE REMOVED UNLESS OTHERWISE STATED MACHINED CORNERS TO BE ROUND OUTSIDE & INSIDE EQUIVALENT CHAMFERS ARE PERMISSIBLE
ISSUE	DATE	NATURE OF AMENDMENTS	MATERIAL :- — USED ON :- CB 20-27-00-4
DRN		SCALE :- 1 : 1	
CHD		DIMENSIONS IN mm	CONTROLLERATE OF INSPECTION (HEAVY VEHICLES) AVADI
TCD		TOLERANCE ON DIMNS UNLESS OTHERWISE STATED	TITLE :- DELIVERY VALVE ASSY
APPD		ALL THREADS CONFORM	D S CAT NUMBER — DRAWING NUMBER CB 20-27-09

KVD NO. 63398

FORMAT	ZONE	REF NO	DESIGNATION	DESCRIPTION	QTY	REMARKS
				TECHNICAL PAPERS		
			Cb 20-27-09	DELIVERY VALVE ASSY		
				ASSEMBLY UNITS		
		1	Cb 20-27-08	DELIVERY VALVE	1	
				PARTS		
		2	20-27-77-5	NUT	1	
		3	20-27-78	SPRING FOR DELIVERY VALVE	1	
		4	20-27-121-1	STOP	1	
		5	20-27-122-1	NUT	1	
		6	20-27-301	SPRING PLATE	1	
		7	20-27-302	RING	1	
		8	20-27-306	LOCK NUT	1	
		9	20-27-313	RING CARRIER RING	1	
		10	20-27-314	SEALING RING	2	
		11	20-27-315	PROTECTIVE CAP	1	
		12	327-52	TAPPET LOCK NUT	1	

ISSUE	DATE	NATURE OF AMENDMENT	ISSUE	DATE	NATURE OF AMENDMENT

DRN
USED ON СБ 20-27-00-4
CHK
CONTROLLERATE OF INSPECTION (HEAVY VEHICLES AVAD)
TITLE
DELIVERY VALVE ASSY
APPD
STOCK CAT NUMBER
ITEM CODE СБ20-27-09
DATE 7-05-87 SHT No 1 OF 1

DRAWING NUMBER
20-27-59

1-25 (✓)

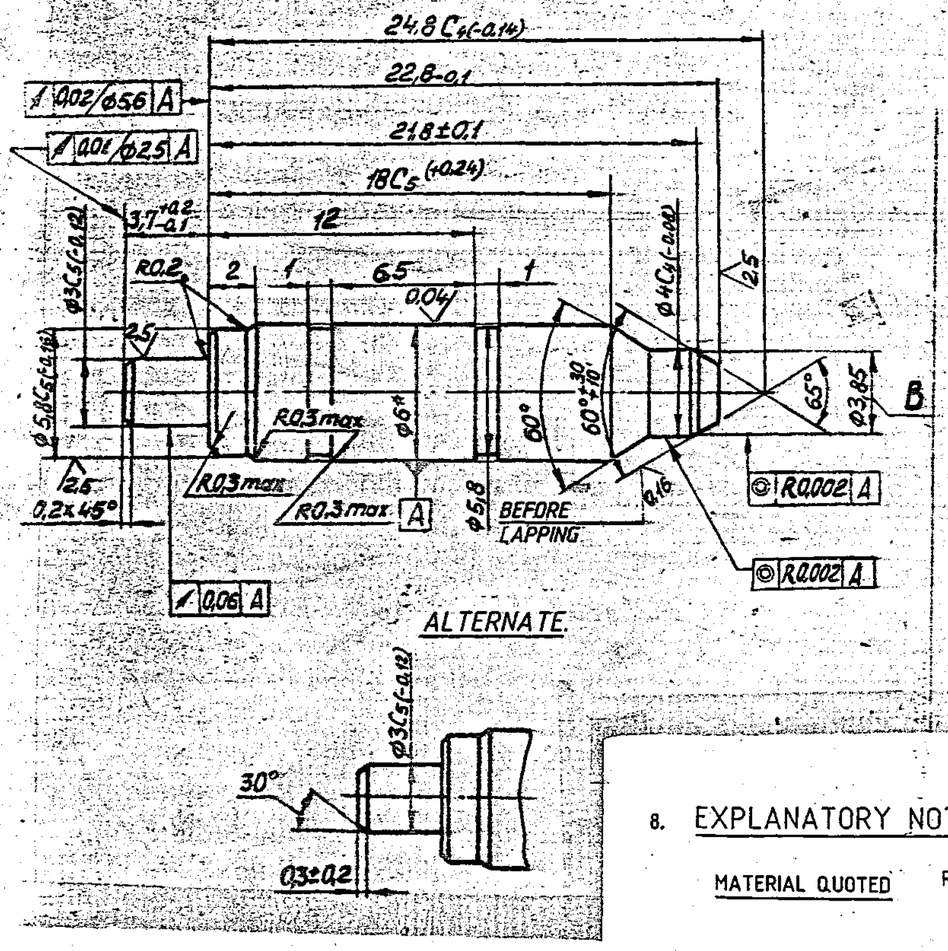

1). INSPECTION GROUP III AS PER TECHNICAL REQUIREMENTS TT-11

2). HRC ≥ 60. THE HARDNESS MAY BE CHECKED WITH THE CALIBR -ATED FILE WITH RANDOM ROCKWELL TEST BEING PERFORMED.

3). UNSPECIFIED LIMIT DEVIATIONS OF DIMENSIONS (EXCEPT FOR ϕ A AND ϕB) ARE AS FOLLOWS:
FOR HOLES - AS PER A_T,
SHAFTS - AS PER B_T,
OTHERS - AS PER CM_T.

4). CONE OF 60° INSTEAD OF 65° IS PERMITTED FOR THE CONIC END OF THE VALVE.

5. * MACHINING SHOULD BE DONE AS PER DRAWING (ASSY 20-27-08).

6). OUT OF ROUNDNESS AND LABING OF SURFACE A SHOULD NOT EXCEED 0.0005 MM.

7). TAPER AND NON-STRAIGHTNESS OF GENERATRIX OF SURFACE A SHOULD NOT EXCEED 0.0005 MM (BEFORE MAKING UP A SET).

8. EXPLANATORY NOTE

MATERIAL QUOTED ROUND BAR. 6.8 -B-4-P18 GOST 14955-77

6.8 DIAMETER OF ROUND BAR

B QUALITY OF SURFACE FINISH

4 CLASS OF ACCURACY

P18 HIGH SPEED TOOL STEEL AS PER GOST 19265-73

(a) CHEMICAL COMPOSITION : (P18- AS PER GOST 19265-73)

	ELEMENT MASS FRACTION %
CARBON	0.7-0.8
MANGANESE	0.5 (max)
SILICON	0.5 (max)
CHROMIUM	3.8 - 4.4
TUNGSTEN	17.0-18.5
VANADIUM	1.0 -1.4
MOLYBDENUM	1.0 (max).
NICKEL	0.4 (max)
SULPHUR	0.03 (max).
NIOBIUM	0.03 (max)

(b) OTHER PROPERTIES : CARBIDE NON-UNIFORMITY, MACROSTRUCTURE DECARBURIZED LAYER DEPTH & FRACTURE TEST ARE TO BE CARRIED OUT AS PER GOST 19265-73

PILOT SAMPLE SHOULD BE APPROVED BY A H S P BEFORE BULK PRODUCTION.

EST. WT.	TO BE STAMPED OR MARKED WHERE INDICATED THUS #
0.007 Kg	(LETTERS)

ALL SHARP EDGES AND CORNERS TO BE REMOVED UNLESS OTHERWISE STATED MACHINED CORNERS TO HAVE R OUT-SIDE R INSIDE EQUIVALENT CHAMFERS ARE PERMISSIBLE.

ISSUE	DATE	NATURE OF AMENDMENTS

DRN	
CHD	
TCD	Naren Patel
APPD	
DATE	25-4-87
SCALE	5 : 1
DIMENSIONS IN mm.	
TOLERANCE ON DIMNS UNLESS OTHERWISE STATED IS 2102-69	
ALL THREADS TO CONFORM TO	

MATERIAL :- ROUND BAR 6.8 - B-4-P18 GOST 14955-77

USED ON :- СБ 20-27-08

CONTROLLERATE OF QUALITY ASSURANCE (HEAVY VEHICLES) A V A D I

TITLE VALVE

D S CAT NUMBER

DRAWING NUMBER 20-27-59

KVD No.-66741

ZE A2

20-27-60

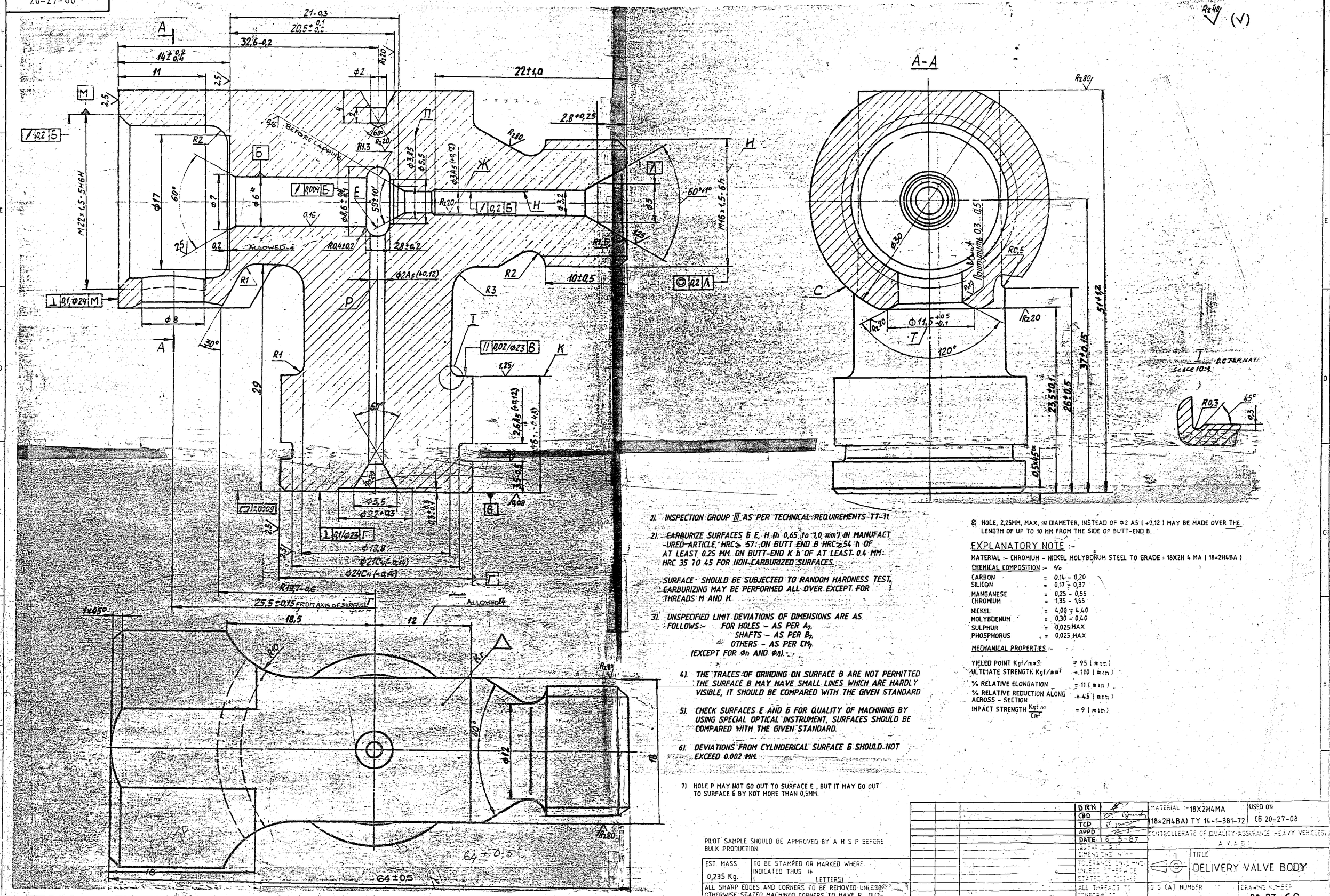

1). INSPECTION GROUP III AS PER TECHNICAL REQUIREMENTS TT-11.

2). CARBURIZE SURFACES Б E, H (h 0,65 to 1,0 mm) IN MANUFACTURED ARTICLE, HRC≥ 57: ON BUTT END B HRC≥54 h OF AT LEAST 0.25 MM. ON BUTT-END K h OF AT LEAST 0.4 MM: HRC 35 TO 45 FOR NON-CARBURIZED SURFACES.

SURFACE SHOULD BE SUBJECTED TO RANDOM HARDNESS TEST, CARBURIZING MAY BE PERFORMED ALL OVER EXCEPT FOR THREADS M AND H.

3). UNSPECIFIED LIMIT DEVIATIONS OF DIMENSIONS ARE AS FOLLOWS:- FOR HOLES – AS PER A_7,
SHAFTS – AS PER B_7,
OTHERS – AS PER CM_7.
(EXCEPT FOR Φn AND Φл).

4). THE TRACES OF GRINDING ON SURFACE B ARE NOT PERMITTED THE SURFACE B MAY HAVE SMALL LINES WHICH ARE HARDLY VISIBLE, IT SHOULD BE COMPARED WITH THE GIVEN STANDARD

5). CHECK SURFACES E AND Б FOR QUALITY OF MACHINING BY USING SPECIAL OPTICAL INSTRUMENT, SURFACES SHOULD BE COMPARED WITH THE GIVEN STANDARD.

6). DEVIATIONS FROM CYLINDERICAL SURFACE Б SHOULD NOT EXCEED 0.002 MM.

7) HOLE P MAY NOT GO OUT TO SURFACE E, BUT IT MAY GO OUT TO SURFACE Б BY NOT MORE THAN 0,5MM.

8) HOLE, 2,25MM, MAX, IN DIAMETER, INSTEAD OF Φ2 A5 (+0,12) MAY BE MADE OVER THE LENGTH OF UP TO 10 MM FROM THE SIDE OF BUTT-END B.

EXPLANATORY NOTE :-

MATERIAL :- CHROMIUM - NICKEL MOLYBDENUM STEEL TO GRADE : 18X2H 4 MA (18×2H4BA)

CHEMICAL COMPOSITION :- %

CARBON	=	0,14 – 0,20
SILICON	=	0,17 – 0,37
MANGANESE	=	0,25 – 0,55
CHROMIUM	=	1,35 – 1,65
NICKEL	=	4,00 – 4,40
MOLYBDENUM	=	0,30 – 0,40
SULPHUR	=	0,025 MAX
PHOSPHORUS	=	0,025 MAX

MECHANICAL PROPERTIES :-

YIELED POINT Kgf/mm²	= 95 (min)
ULTIMATE STRENGTH: Kgf/mm²	= 110 (min)
% RELATIVE ELONGATION	= 11 (min)
% RELATIVE REDUCTION ALONG ACROSS - SECTION	= 45 (min)
IMPACT STRENGTH $\frac{Kgf\,m}{cm^2}$	= 9 (min)

PILOT SAMPLE SHOULD BE APPROVED BY A H S P BEFORE BULK PRODUCTION.

EST. MASS	TO BE STAMPED OR MARKED WHERE INDICATED THUS (LETTERS)
0,235 Kg.	

ALL SHARP EDGES AND CORNERS TO BE REMOVED UNLESS OTHERWISE STATED MACHINED CORNERS TO HAVE R OUTSIDE R INSIDE EQUIVALENT CHAMFERS ARE PERMISSIBLE.

ISSUE	DATE	NATURE OF AMENDMENTS

DRN
CHD
TCD
APPD
DATE 6-5-87
DIMENSIONS IN mm
TOLERANCE ON DIMENSIONS UNLESS OTHERWISE STATED IN DRAWING
ALL THREADS TO CONFORM TO

MATERIAL :- 18X2H4MA (18×2H4BA) TY 14-1-381-72

USED ON СБ 20-27-08

CONTROLLERATE OF QUALITY ASSURANCE (HEAVY VEHICLES) A V A D

TITLE DELIVERY VALVE BODY

D S CAT NUMBER

DRAWING NUMBER 20-27-60

KVD No: 63397

SIZE: A1

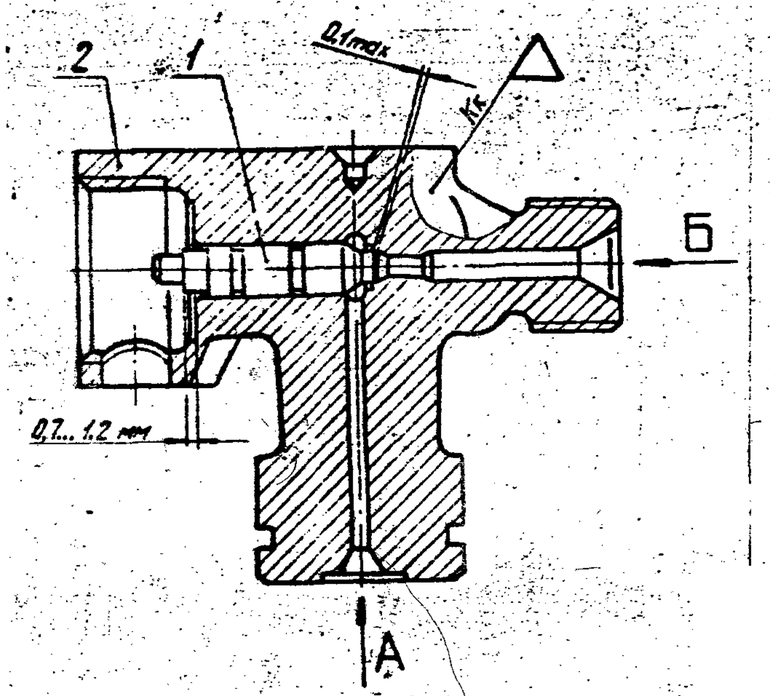

THE FUEL TEMPERATURE RANGES FROM 18° TO 20°C. THE TEST ACCUMULATOR CAPACITY Q IS EQUAL TO 60 ± 1 cm³. WHEN 37MPa (380 kgf/cm²) IS APPEARED TO THE VALVE, THE PRESSURE DROP FROM 34 MPa (350 kgf/cm²) TO 29 MPa (300 kgf/cm²) SHOULD TAKE PLACE FOR 11 TO 30s.
THE CONE LEAKAGE IS NOT ACCEPTABLE. IT IS POSSIBLE TO CHECK THE VALVE FOR CLOSE-FIT BY COMPARING WITH REFERENCE VALVES SELECTED AS PER INSTRUCTIONS И В 20-67.

7. CHECK THE CONE FOR AIR-TIGHTNESS BY PRESSURIZING FROM SIDE FOR 40s AT THE PRESSURE RANGING-FROM 11,7 TO 12,7 MPa (120 TO 130 kgf/cm²). PRIOR TO PRESSURI--ZING, RINSE OUT THE PARTS CAREFULLY WITH GASOLINE. DURING PRESSURING THE PAIRS, THE WORKING CONE SHOULD NOT LEAK.
8. PRESERVE AND STORE AS PER INSTRUCTIONS DEPENDING ON THE STORAGE TERM.

1. THE COMPOUND-LAPPED PARTS, VIZ:- DELIVERY VALVE BODY (REF.NO.2) AND THE VALVE (REF.NO.1) ARE ONE PAIR. THEREFORE REPLACING OF ONE OF THEM BY THE OTHER IS NOT PERMITTED.
2. THE COMPOUND-LAPPED DIAMETER OF THE DELIVERY VALVE BODY HOLE SHOULD BE 6±0,1mm.
3. THE SEALING BELT ON THE WORKING CONE SHOULD BE NEAR THE BASE OF THIS CONE. IT SHOULD BE NOT MORE THAN 0,1mm IN WIDTH.
4. THE COMPOUND-LAPPED SURFACES OF THE VALVE AND ITS BODY SHOULD HAVE EVEN LUSTER OVER THE WHOLE SURFACE. TRACES OF GRINDING AND LOBING NOT PERMITTED. ONLY THE THINNEST LINES WHICH CAN HARDLY BE VISIBLE ARE ACCEPTABLE ON THE COMPOUND-LAPPED SURFACES, WHERE FINISH SHOULD NOT BE WORSE THAN THOSE OF THE STANDARD.
5. THE MOVEMENT OF THE VALVE IN THE DELIVERY VALVE BODY (BOTH HAD TO BE PRELIMINARILY WASHED IN THE FILTERED FUEL) SHOULD BE SO THAT THE VALVE PROJECTED OUT OF THE BODY FOR 1/3 OF ITS LENGTH AND INCLINED AT 45° WITH RESPECT TO THE HORIZON DROPS BY GRAVITY. THE LOCAL JAMS WHICH CAN BE DETECTED BY FEEL AND WHICH PREVENTS THE FREE MOVING OF THE VALVE ARE NOT ACCEPTABLE.
6. USE THE TEST SET TO CHECK THE PAIR FOR CLOSE-FIT BY PRESSURIZING FROM SIDE A WITH THE AID OF THE CAREFULLY FILTERED FUEL WHOSE ENGLER'S VISCOSITY SHOULD BE WITHIN THE LIMITS OF 1,45 ± 0,05. THE OIL MAY BE ADMIXED TO PROVIDE FOR THE PROPER VISCOSITY.

KVDNO 63397

PILOT SAMPLE SHOULD BE APPROVED BY A H S P BEFORE BULK PRODUCTION

			EST. MASS 0,242 Kg	TO BE STAMPED OR MARKED WHERE INDICATED THUS # (LETTERS)
			ALL SHARP EDGES AND CORNERS TO BE REMOVED UNLESS OTHERWISE STATED MACHINED CORNERS TO HAVE R OUTSIDE R INSIDE EQUIVALENT CHAMFERS ARE PERMISSIBLE	
ISSUE	DATE	NATURE OF AMENDMENTS		
DRN		SCALE :- 2 : 1	MATERIAL :-	USED ON :- СБ 20-27-09
CHD		DIMENSIONS IN mm	CONTROLLERATE OF INSPECTION (HEAVY VEHICLES) AVADI	
TCD		TOLERANCE ON DIMNS UNLESS OTHERWISE STATED	TITLE :- DELIVERY VALVE	
APPD			D S CAT NUMBER	DRAWING NUMBER СБ 20-27-08
DATE	6/3/87	ALL THREADS CONFORM TO		

		TECHNICAL PAPERS	
	CB 20-27-08	DELIVERY VALVE ASSY	
		PARTS	
1	20-27-59	VALVE	1
2	20-27-60	DELIVERY VALVE BODY	1

ISSUE	DATE	NATURE OF AMENDMENTS	ISSUE	DATE	NATURE OF AMENDMENTS
DRN	G. [illegible]	USED ON	CB 20-27-09		
CHD	[illegible]	CONTROLLERATE OF INSPECTION (HEAVY VEHICLES) AVADI			
TCD	[illegible]	TITLE: DELIVERY VALVE ASSY			
APPD	[illegible]	D.S CAT NUMBER	ITEM LIST FOR CB 20-27-08		
DATE 7.05.87	SHT No 1 OF 1