GROUP - A

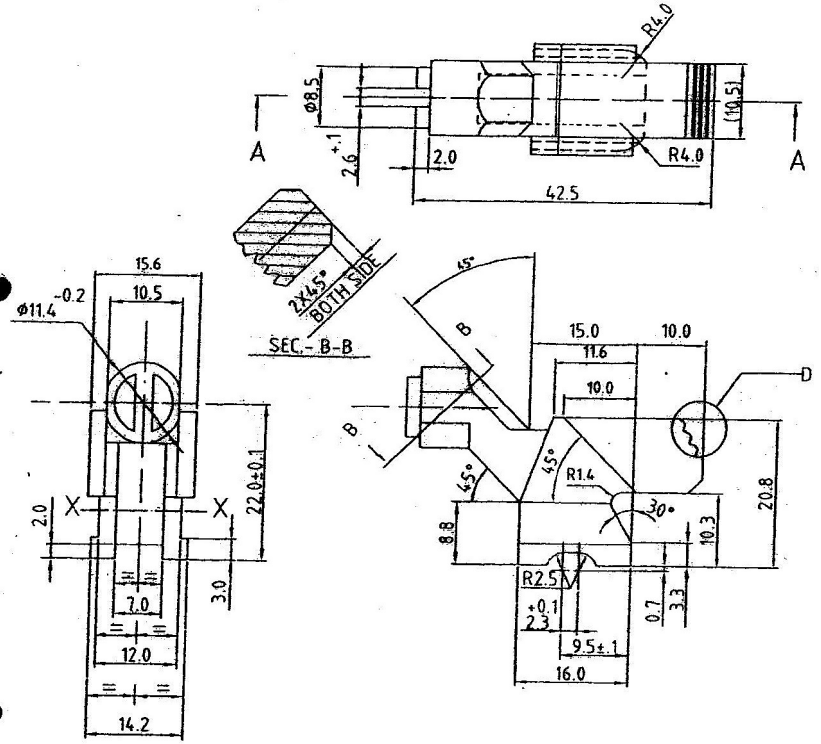

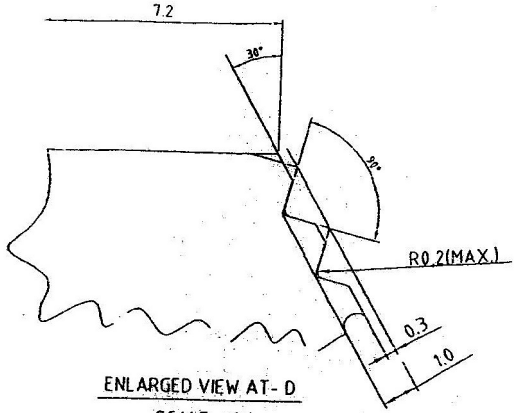

ENLARGED VIEW AT- D

SCALE -10:1

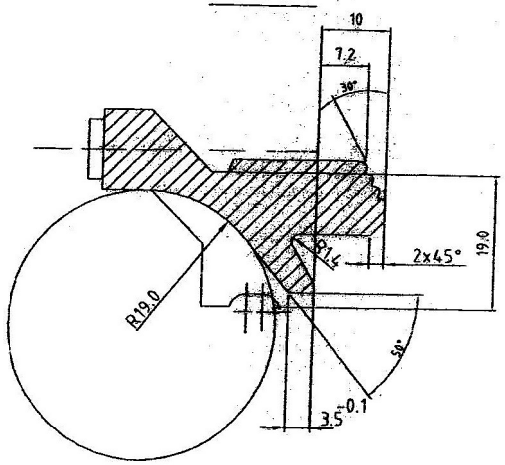

SEC.- A-A

NOTE :-

1 DIMENSIONS ARE IN m.m

2 UNTOLERANCED DIMNS. TO BE AS PER STD IS: 11166- 1984 CLASS 1 OF INV. CASTING

3 CASTING SHOULD BE FREE FROM DEFECTS LIKE CRACKS, HOT TEARS, COLD SHUTS ETC. AND SURFACES FINISH MUST BE SHOT BLASTED

4 CASTING TO BE SUPPLIED IN ANNEALED CONDITION WITH 120 TV ALONG WITH TEST COUPONS TO BE TESTED FOR HARDNESS AT ANNEALED CONDITION AND ALSO AFTER FINAL HEAT - TREATMENT WITH 300 ± 50°C BELOW LINE X-X [FOR EACH HEAT/CAST]

5 DECARBURISATION SHOULD NOT BE MORE THAN 2% OF THE THICKNESS

6 TEST PIECES SHOULD BE PREPARED IN ACCORDANCE WITH SPECN. IS:10343 - 1982. TEST PIECES SHOULD BE CAST FROM SAME FURNANCE MELT USED FOR CASTINGS

7 ALL CASTINGS & REPRESENTATIVE TEST SAMPLE SHALL BE LEGIBLY MARKED WITH MANUFACTURER S IDENTIFICATION SYMBOL 13 mm SIZE

8 MAGNETIC TEST FOR CRACK DETECTION TO BE CARRIED OUT IN SAMPLES AS PER INSPECTION LEVEL iv AT A.Q.L 0.65 AS PER IS: 2500 - PT. ii 1965

9 TEST PIECES SHOULD CONFORM TO MECH. PROPERTIES AS LAID DOWN IN SEC. 2 OF BS:3146 PT.1,1974 FOR CLA.12

10 RADIOGRAPHIC ACCEPTANCE STANDARD AS PER SPECN. ASTM E-192. GAS HOLES & FOREIGN MATL. LEVEL -5 SHRINKAGE LEVEL (ALL TYPES) -3. CRACKS, COLD SHUTS, HOT TEARS ETC. NOT ACCEPTABLE.

a) CASTINGS SHOULD BE TESTED WITH X RAYS, GAMA RAYS WILL NOT BE PERMITED FOR RADIOGRAPHIC TEST UP TO 25 mm THICKNESS.

b) 100% OF THE ADVANCE SAMPLE SHALL BE SUBJECTED TO RADIOGRAPHIC TEST

c) FOR BULK COMPONENTS, 5% OF EACH CAST / HEAT SHOULD BE SUBJECTED TO RADIOGRAPHIC TEST

11 SHARP EDGES & BURRS IF ANY ARE TO BE REMOVED

12 10 TO 15 NOS. SAMPLE CASTING DULY PASSED BY INSPECTOR IN RADIOGRAPH TEST. MATL. DIMNS. ETC. TO BE SENT TO THIS FACTORY FOR MACHNING & FITMENT TRIAL BEFORE BULK SUPPLY

13 VISUAL EXAMINATION - SHOULD CONFORM TO CLAUSE 8.1 & 8.2 OF SPECN. IS: 10343 AND A.Q.L 1.5 OF IS: 2500 PT. 1 INSPECTION LEVEL iv

14 INGATE TRACE TO BE REMOVED FROM CASTING TO CONFORM DRAWING GEOMETRY

HOS/MPM
प्रमाणित प्रति / CERTIFIED COPY OF
ड्रॉइंग / लेआउट / गेज शिड्यूल
DRG/LAYOUT/GAUGE SCHEDULE
दिनांक / AT THIS DATE 16-4-18
सी डी डी / CDD
राइफल फैक्टरी, ईशापुर
RIFLE FACTORY, ISHAPORE

MATL. :-

BS 3146 Pt.1:1974, TYPE-CLA- 12 GRADE -C (SEE NOTE-4)

× RESIDUALS Material shall be tested as per Appendix 'E' of ~~CLA-CLA-12~~ 2(c) Specn.

COMPOSITION OF MATERIAL	C%	Si	Mn	Ni ×	Cr	Mo	Cu ×	S	P
% MIN.	0.55	0.3	0.5	-	0.8	0.2	-	-	-
% MAX.	0.65	0.8	1.0	0.4	1.5	0.4	0.3	0.035	0.035

VETTED FOR MATL. ONLY
[RK CHAUBAS] 12/4/18
AE(QA)
I/C P & TC Section
Date :- 12 Apr 2018.
SQAE(SA) ICHAPUR

VETTED FOR MATERIAL
VETTED FOR MATL. ONLY
D/M - 8/5/07
I/C QA&S - 8/5/07
JTO
FOR SQAO
SQAE (SA)

TITLE OF TOOL		2003	NAME	DATE
INVESTMENT CASTING DRAWING		DGM		
		DRN.	A.K.GHOSH	
ORDNANCE FACTORY BOARD RIFLE FACTORY ISHAPORE	SCALE 1:1	CHKD.		
		APPD.		
RIFLE 5.56 mm		DRG.NO.-		
RETAINER SPRING RECOIL (MODIFIED) AS PER TG/EME. NEW DELHI		RFI SK- 8064 -S		
		SHEET 1	OF 1	