188.25.002 / C	CASTING
HOUSING UPPER	

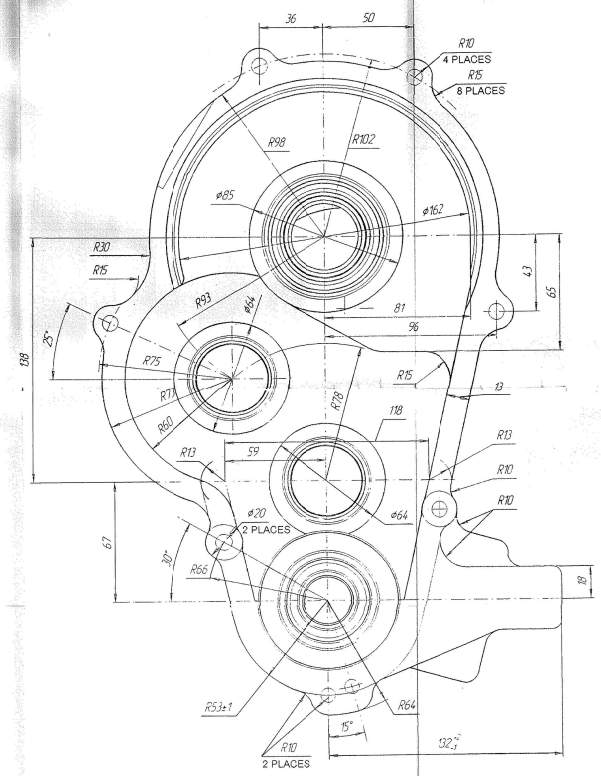

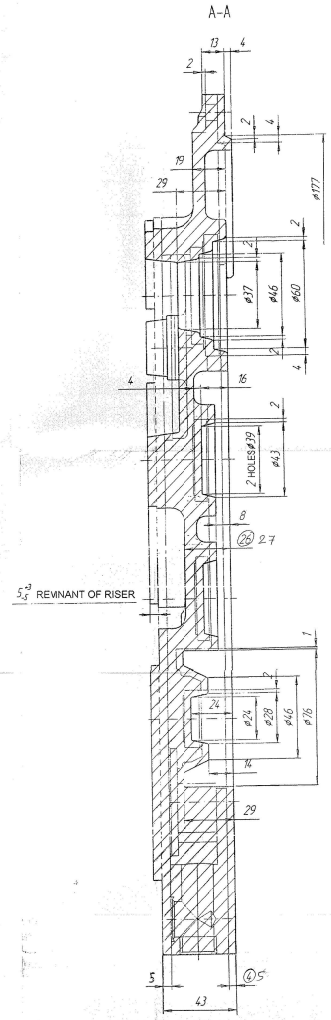

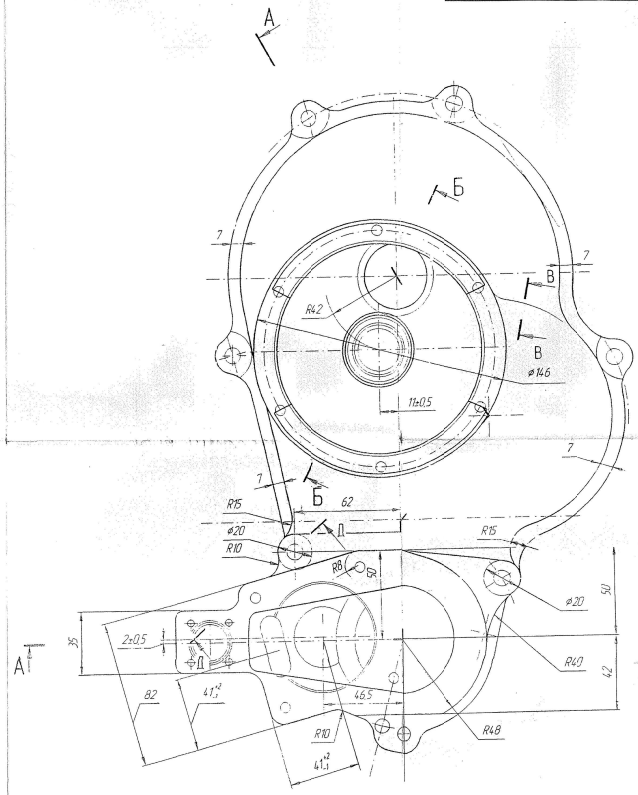

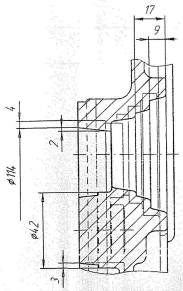

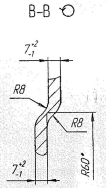

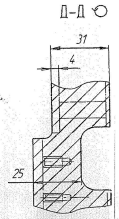

1. * DIMENSIONS FOR REFERENCE
2. EXTERNAL DRAFT ANGLES SHOULD NOT EXCEED 1:20
3. UNSPECIFIED RADII SHOULD NOT EXCEED 5MM.
4. HEAT TREATMENT IS TO BE CARRIED OUT AS PER MODE GOST 1583-93
5. UNSPECIFED LIMIT DEVIATION DIMENSION ±2MM.
6. MATERIAL IS TO BE MARKED ON ANY NON WORKING SURFACE WITH PUNCH MARK OR BY CASTING WITH TYPE AS PER 5 AS PER 8 GOST 2933-62.
7. AFTER MACHINING DRESSING OF SMALL DEFECTS OF COMPOUND ON THE BASE OF EPOXY GROUP RESIN ЭД -20 GOST ~~1587-84~~ IS ALLOWED. 19587-84

Dram Trans & Smt
APPROVED

T 90

MATERIAL	CASTING WT.	
GOST 1583-93 ALU ALLOY AK-74	4.0 Kg.	
ALT. MATERIAL	HAMMER	SCALE
		1:1
DRAWN	CHECKED	APPROVED

DRAWING NO. 188.25.002
NOMENCLATURE: HOUSING UPPER

HEAVY VEHICLES FACTORY
AVADI, CHENNAI