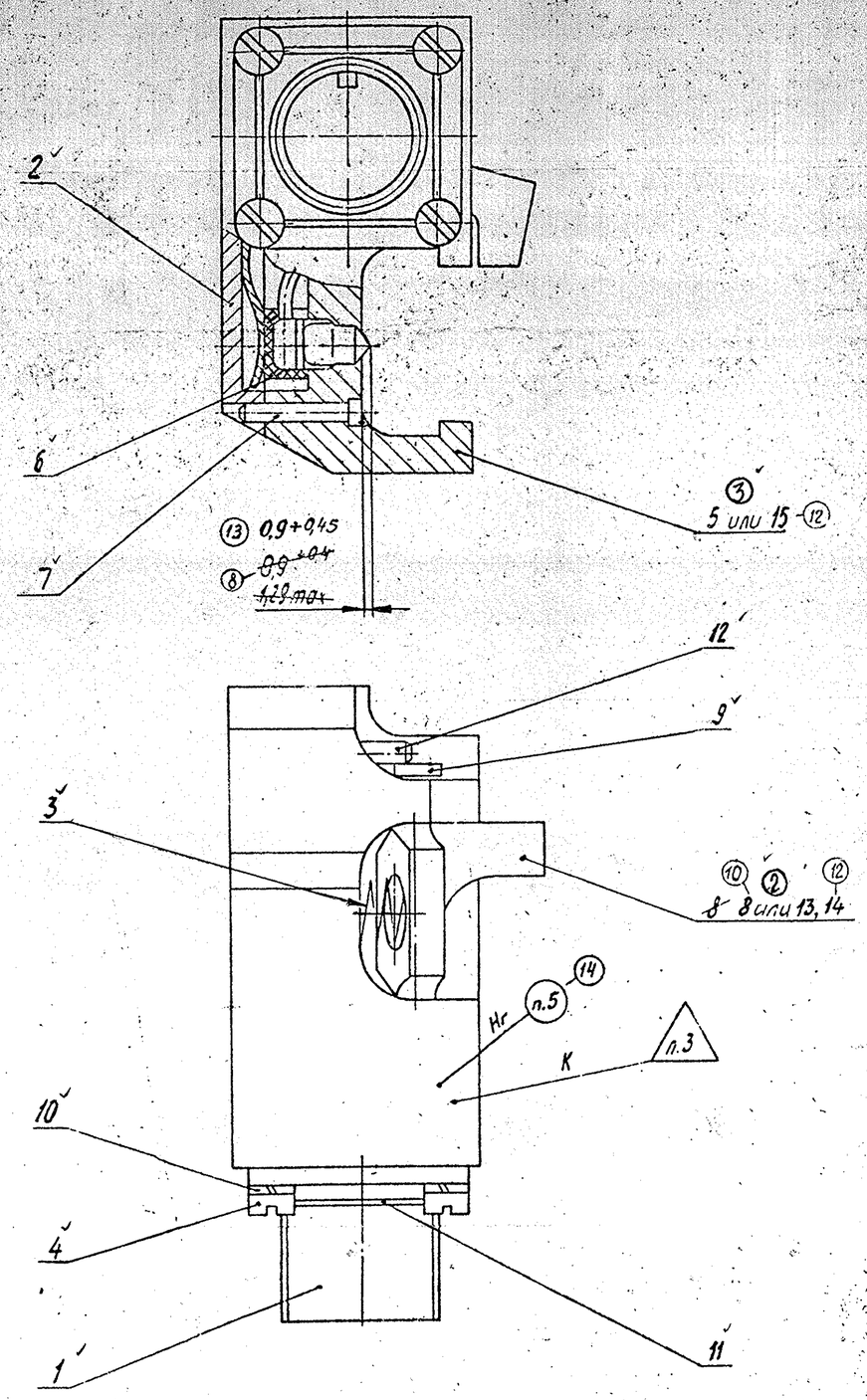

CONTACTOR

Assembly Drawing

Scale 2:1. Mass: 0.36

(1) 1. Check for electric strength by applying voltage of 500 V 50 Hz AC for one minute. Power source should be no less than 0.5 kW.

2. Insulation resistance between contacts of block, Ref. No. 1, and ground, Ref. No. 5, should not be less than 20 megohms under normal climatic conditions. Measure resistance by megohmmeter with voltage of 500 V.

3. Stamp

4. Lock screws, Ref. No. 4, with wire, Ref. No. 11, according to reference sample.

5. Mark with type ПО-5, ГОСТ 2930-62

(2) 8 or 13, 14

(3) 5 or 15

FINAL DRG FOR MFR. AT CFT
DATE 15/2/93
UP-DATED 10/1/88
CHECKED
F/M PROJ
S C T Копия верна 10.02.93
DGM PROJ 15.02.93

2A42					
2A42.07.000СБ (11)					
CONTACTOR Контактор ASSEMBLY DRAWING Сборочный чертеж		Лит.	Масса	Масш.	
		Д	0,36	2:1	
		Лист	Листов 1		

2A42.07.000СБ

Перв. примен.							
Справ. №							
Подп. и дата							
Инв. № дубл.							
Взам. инв. №							
Подп. и дата							
Инв. № подл.	Подп. и дата	Взам. инв. №	Инв. № дубл.	Справ. №	Перв. примен.	Подп. и дата	
12332	22.02.89	2A74-74					