7490314072, 41840

THIS DOCUMENT AND THE INFORMATION CONTAINED IN IT ARE PROPRIETARY AND CONFIDENTIAL TO OFT. NO PERSON OR ENTITY IS ALLOWED TO COPY, REPRINT, REPRODUCE OR PUBLISH ANY PART OF THIS DOCUMENT, NOR DISCLOSE ITS CONTENTS TO OTHERS, NOR MAKE ANY USE OF IT, NOR ALLOW OR ASSIST OTHERS TO MAKE ANY USE OF IT UNLESS BY THE PRIOR WRITTEN EXPRESS AUTHORIZATION OF OFT AND THEN ONLY TO THE EXTENT AUTHORIZED.
COPYRIGHT-OFT.

UNCONTROLLED COPY
CERTIFIED CORRECT COPY OF APPROVED DRAWINGS AT THIS DATE 30-11-2020
Design & Drawing Office
Ordnance Factory
Tiruchirapalli-620009

SHEET REV STATUS
ALL SHEETS ARE THE SAME REVISION

REVISION RECORD

REV	ECO	DESCRIPTION		DATE	APVD
01			Freeze	11-Sep-13	
02			Freeze	28-Nov-13	
03			Restricted	27-Aug-14	L. Goldshtein
–	T00065	Identical To Previous	Released	09-Apr-18	L. Goldshtein

NOTES :
1. INTERPRET THIS DRAWING IAW ASME Y14.100M.
2. MATERIAL: ALLOY STEEL BAR RND SAE 4130 NORMALIZED PER SAE-AMS-S-6758 OR SAE 4340 NORMALIZED PER SAE-AMS-S-5000.
3. UNLESS OTHERWISE SPECIFIED, UNDEFINED MACHINED FILLET RADII SHALL BE 0.2...0.3.
4. DEBURR AND REMOVE SHARP EDGES, APPROX. 0.2X45 Deg.
5. GENERAL TOLERANCES ACCORDING TO ISO 2768-m.
6. HEAT TREAT TO 35±3 HRC PER AMS 2759/1.
7. FINISH:
   7.1. A DRY FILM LUBRICATION IN A FLUOROPOLYMER ORGANIC RESIN CLASS 2 COLOR MATTE BLACK TYPE I; 5-13 MICRON THICK PER VS-1-3-1-165 (OR EQUIVALENT).
   7.2. PROTECT DEFINED THREAD AND SURFACES MARKED BY [ ] AFTER PHOSPHATE.
8. QUALITY ASSURANCE PROVISIONS:
   8.1. QUALITY ASSURANCE PROVISIONS FOR THIS ITEM PER RDMQD00012P.
   8.2. MAJOR CHARACTERISTICS NRS 101 TO 103.
9. PARENTHETICAL FIGURES ARE FOR REFERENCE ONLY.
10. PACKAGING AND PACKING: THE FINISHED PART SHALL BE PRESERVED AND PACKAGED IN ACCORDANCE WITH MANUFACTURER'S BEST COMMERCIAL PRACTICE.
11. IDENTIFY PER MIL-STD-130 PARA 4.1.B, BY LABELING ITS CONTAINER WITH THE PART NUMBER. CHARACTERS MINIMUM TEXT HEIGHT 1.25 MM.

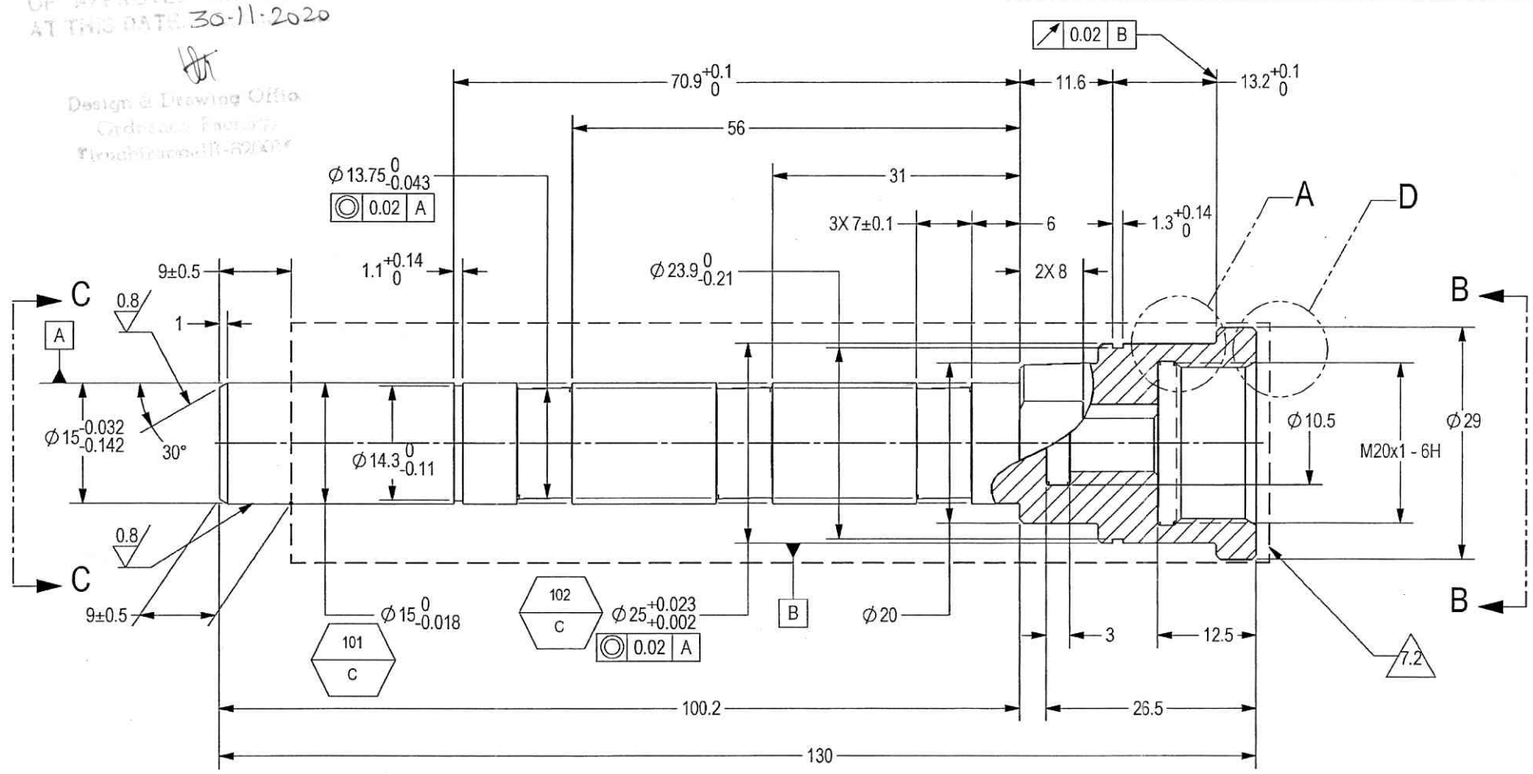

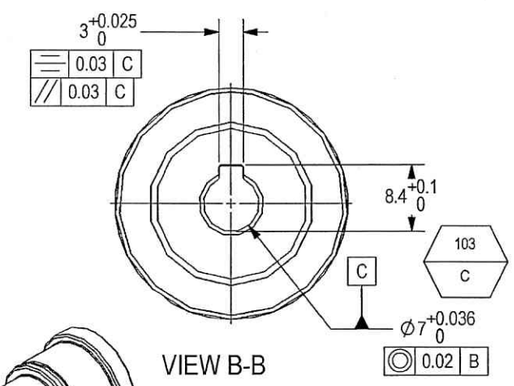

VIEW B-B

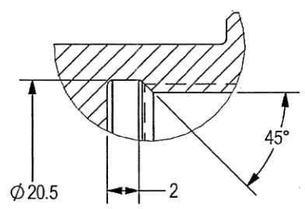

DETAIL A
SCALE 4 : 1

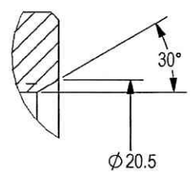

DETAIL D
SCALE 4 : 1

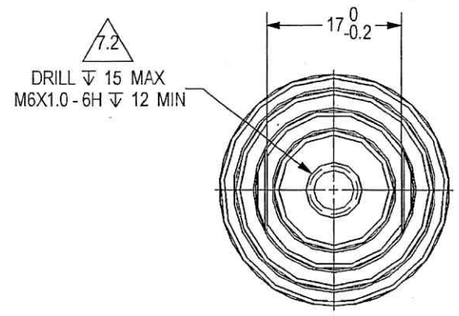

VIEW C-C

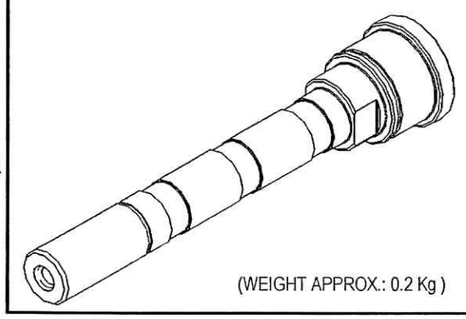

(WEIGHT APPROX.: 0.2 Kg)

1.6 (0.8)

SEE ATTACHED MEDIA

UNLESS OTHERWISE SPECIFIED		SIGNATURE	DATE
DIMENSIONS ARE IN MM PER ASME Y14.5 - 2009	DRAWN		
TOLERANCES LINEAR SEE NOTE 5 / ANGULAR SEE NOTE 5	CHECKED		
	HOS/DDO		3/9/20
1st ANGLE PROJECTION	OFFICER/PRODN		
	OFFICER/QC		
PROJECT OFFICER / SURFACE TEXTURE IN MicroMeter	OFFICER/DDO		9/9

ORDNANCE FACTORY
TIRUCHIRAPPALLI

TITLE: SHAFT MOTOR
FOR: ROTOR ASSY
OF: 12.7MM SRCG

SIZE	CAGE CODE	DWG NO	
C	2291A	074305A-00	--

SCALE 2:1 | AUTOMATED DRAWING (SW) | SHEET 1 OF 1

PDME PROJECT | PDME MODEL: 074305A-00 SHAFT MOTOR | STATUS: WIP

DWG NO 074305A-00 SH 1

PLM Control