DRG No.	IC	SS	S	AA	A	C	SST
	2101	01	02	01	05	002	00DA

GENERAL TOL. : FINE / MEDIUM / COARSE ✓
CLASS TO IS: 2102

DRG. CONVENTIONS CONFIRM TO INDIAN STANDARDS
DIMENSIONS ARE IN mm UNLESS OTHERWISE STATED.

CONTROLLED COPY No.: 01

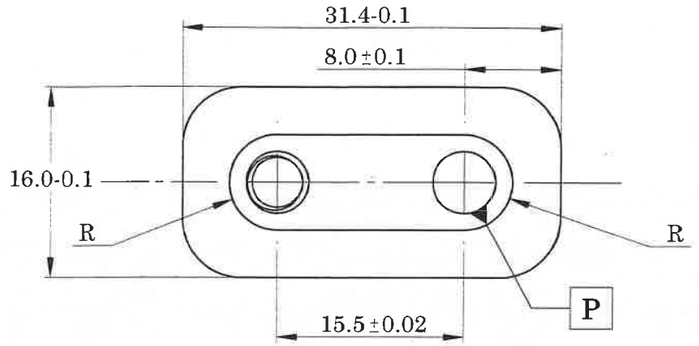

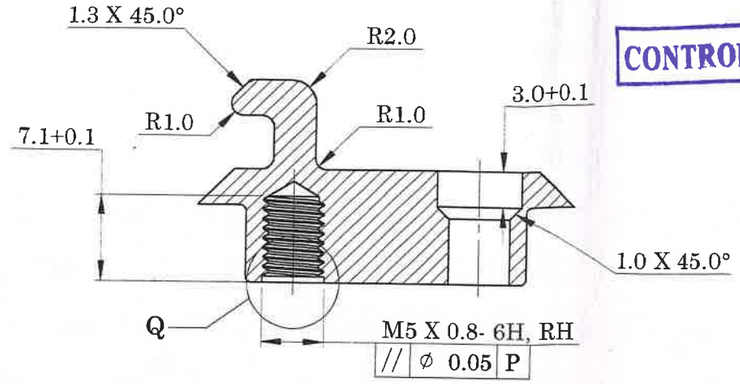

SECTION A-A

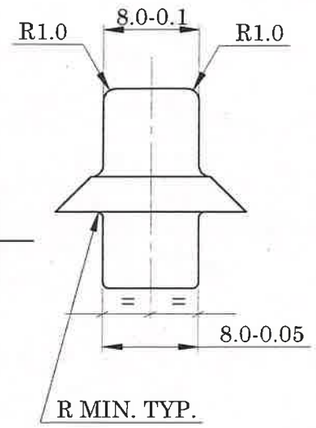

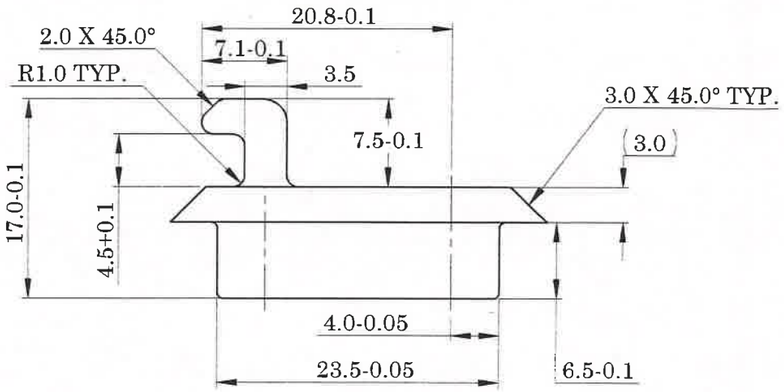

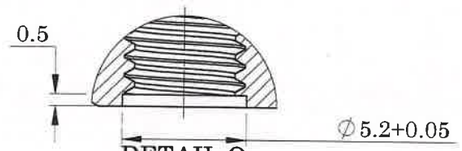

DETAIL Q
SCALE 4 : 1

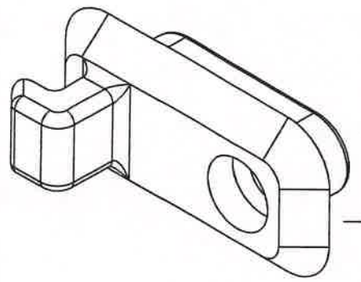

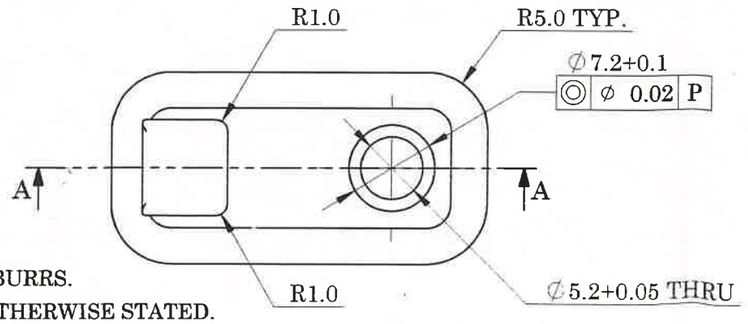

NOTE:
1.REMOVE ALL SHARP EDGES AND BURRS.
2.ANGULAR TOLERANCE IS 30' OR OTHERWISE STATED.
3.DIMENSIONS ARE TO BE READ AFTER APPLYING PROTECTIVE FINISH.
4.IF THE COMPONENT IS TO BE MANUFACTURED THROUGH MIM ROUTE, REFER ARDE SPECN No: DRDO-ARDE-MIM-TSP-051-2019.
5.HARDNESS BEFORE COATING: 300 TO 350 HV.
6.HEAT TREATMENT:- FERRITIC NITRO CARBURIZING AS PER SAE SPECIFICATION No. AMS 2753C
COATING HARDNESS : 600±100 HV.
COATING THICKNESS: 15 µm Min.
7.SURFACE FINISH ▽▽ ALL OVER UNLESS OTHERWISE SPECIFIED.

Sr. No.	DATE	AUTHORITY	BRIEF RECORD	ZONE	CD	GO
					SIGN	

DRN:SOURABH SIGN: DATE: 24/08/2022	CHECKED	MATERIAL: STEEL TO IS: 5517-1993, Gd, 40Ni6Cr4Mo3 (EN-24)
APPD. DATE:24/08/2022	FOR DIRECTOR	PROTECTIVE FINISH: SEE NOTE
SEALED DATE:		
SHEET SIZE: A3 SCALE: 2:1	EST. MASS 18.82 gm	TITLE:
DESIGN AUTHORITY ARDE PUNE 411021		BARREL ADAPTER RIGHT

DRG No.	IC	SS	S	AA	A	C	SST
	2101	01	02	01	05	002	00DA

9 mm	PART No.	DS CAT No.	AHSP