DS CAT No.
1005-560470

DIMENSIONS ARE IN mm

Rz40 (√)

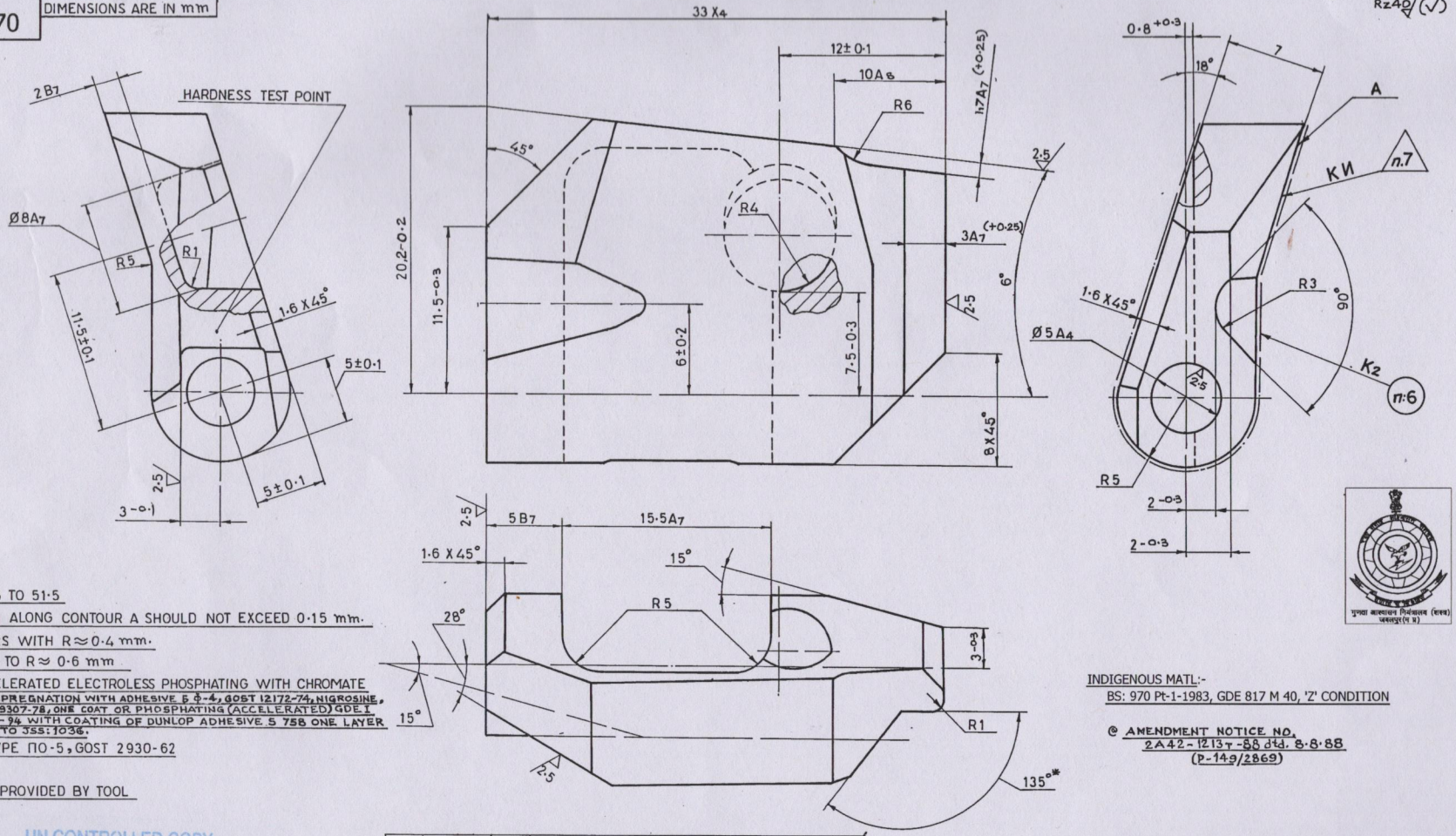

NOTES-

1. HRC 43·5 TO 51·5
2. THE DEVIATION ALONG CONTOUR A SHOULD NOT EXCEED 0·15 mm.
3. INNER CORNERS WITH R≈0·4 mm.
4. BLUNT EDGES TO R≈ 0·6 mm
5. COATING: ACCELERATED ELECTROLESS PHOSPHATING WITH CHROMATE TREATMENT/IMPREGNATION WITH ADHESIVE 5 Φ-4, GOST 12172-74, NIGROSINE, GRADE A, GOST 9307-78, ONE COAT OR PHOSPHATING (ACCELERATED) GDE I JSS: 0465-01-94 WITH COATING OF DUNLOP ADHESIVE 5 758 ONE LAYER & NIGROSINE TO JSS: 1036.
6. MARK WITH TYPE ПО-5, GOST 2930-62
7. STAMP
8. * THE SIZE IS PROVIDED BY TOOL

INDIGENOUS MATL:-
BS: 970 Pt-1-1983, GDE 817 M 40, 'Z' CONDITION

@ AMENDMENT NOTICE NO.
2A42-1213T-88 dtd. 8.8.88
(P-149/2869)

UN CONTROLLED COPY
CERTIFIED CORRECT COPY OF APPROVED DRAWINGS AT THIS DATE 30/01/24
DESIGN & DRAWING OFFICE,
ORDNANCE FACTORY, TIRUCHIRAPPALI -620 016.

DATE	AUTHORITY	ZONE	NATURE	SIG AHSP	SIG DO
19-8-96	18283-W		NOTE No 5 AMENDED		AC(TS)
30-11-95	18193-W		INDIG MATL ADDED. NOTE No. 5 AMENDED.		
22-9-95	18174-W		PROV SEALING CANCELLED & DRG SEALED.		
20-2-86	16407-W		DRG SEALED PROV		
@ 11-2-92	17220-W		FRONT VIEW:- DIMN. 20.2-0.2 WAS 20.5-0.3 & 1.7A7 (+0.25) WAS 2A7 (+0.25)		
18-8-92			RETRACED WITHOUT CHANGE		

AMENDMENTS

DRG SEALED :- 18174-W 22-9-95 DO CQA(W)

DRN	CHD	ASSY DRG
TCD	CHD G.P. Shukla	DATE
CHIEF D'MAN	DO	AHSP FOR CQA(W)
		SCALE 5:1
		ESTD MASS 0·026

MATERIAL:- STEEL 30 X PA, OST 3-98-80
PROTECTIVE FINISH

CQA(W) JABALPUR

DESIGN No.

PART No. 2A42·01·101

DS CAT No. 1005-560470

19073-W 29-08-07	DS CAT No ADDED & NOMENCLATURE AMENDED	
18845-W 13-1-04	HINDI NOMEN. ADDED.	
18614-W 19-1-2001	INDIGS MATL AMENDED	
18291-W 3-9-96	INDIGS MATL AMENDED	AC(TS)

CATCH कैच