380095

OFB

NOTE:
1. CHAMFERED 0.5x45°

THIS DRAWING/DOCUMENT CONTAINS COMPANY PROPRIETARY INFORMATION USE OR DISCLOSURE IN WHOLE OR IN PART SHALL NOT BE MADE WITHOUT THE WRITTEN PERMISSION OF OFB

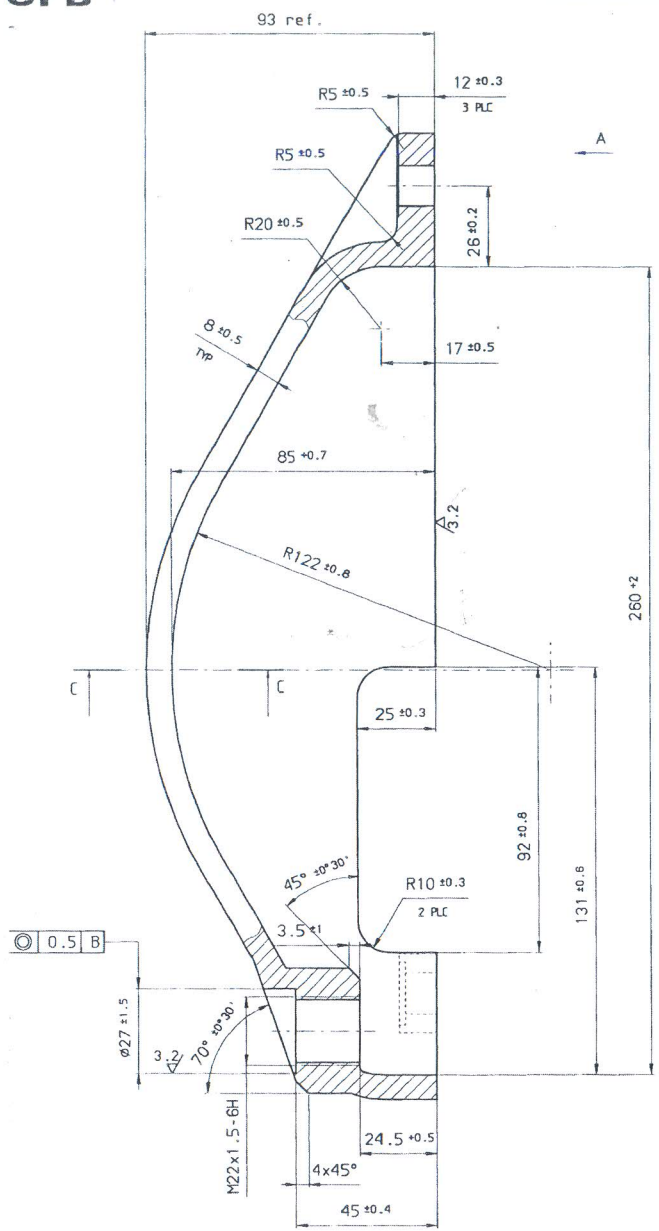

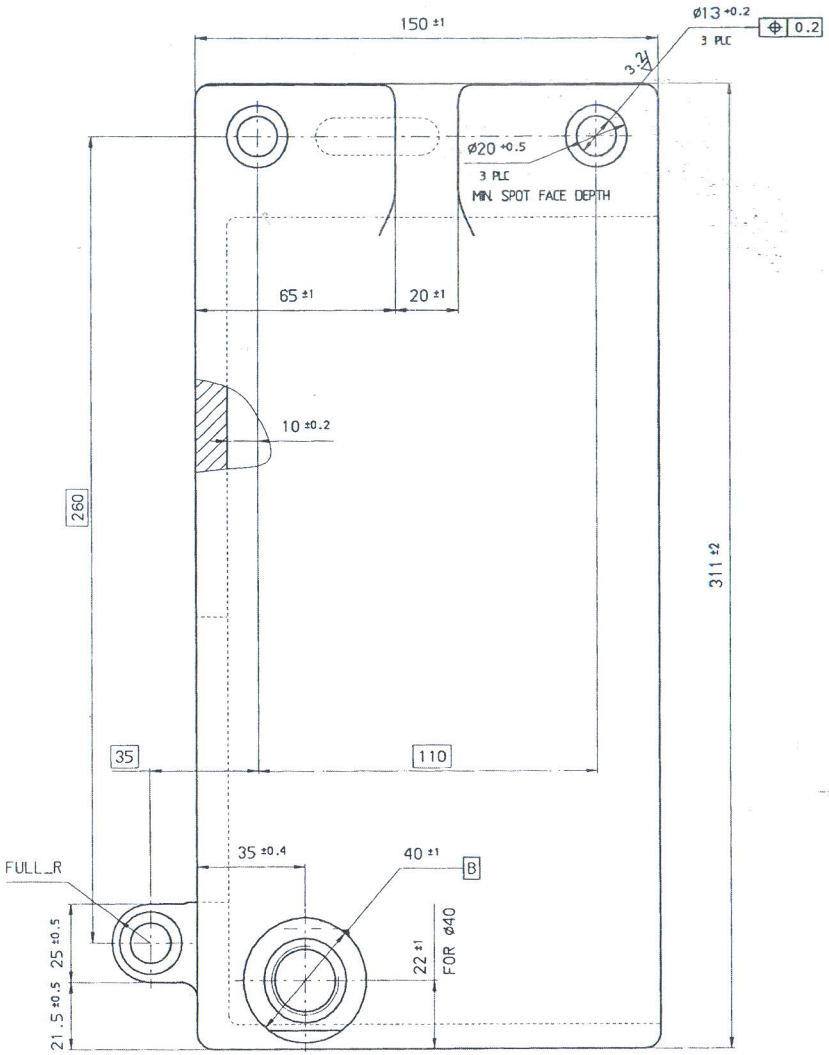

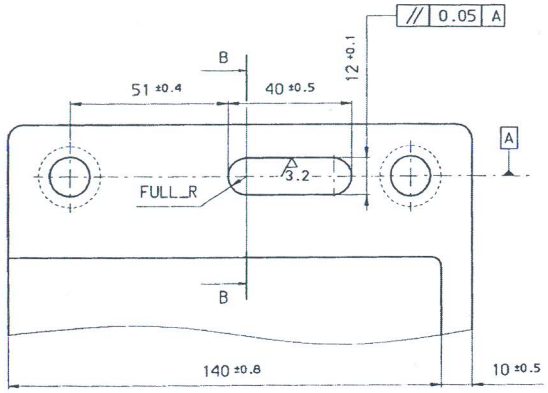

VIEW A

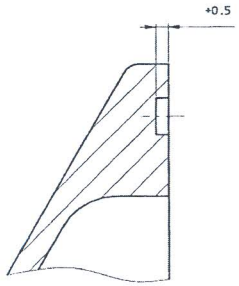

SECTION B-B

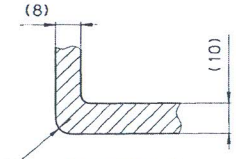

SECTION C-C

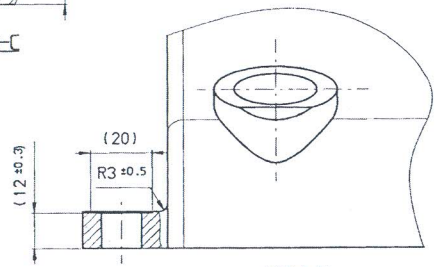

VIEW D

केवल निविदा हेतु
सन्दर्भ माँग पत्र सं0 380148
दिनांक 23-04-2018

DATE: 01.01.2007	ALTERNATE INDIGENOUS MATERIAL SPCN: IS 1030-1989 GOE 280-520N OR 280-520W (REF: CQA(W) JABALPUR LNo. 382402-CQA/W/011 Dt. 12.12.Y 2003)		JA1 JWM-CDO
6.3 (3.2) MACHINING INSTRUCTIONS	No. 1990 Dt. 01/04/01	18912-W Dt. 27-5-2005	DRAWING SEALED CQA (W), JABALPUR
UNSPECIFIED TOLERANCES FOR DIMENSIONS AND ANGLES DIMENSIONS ANGLES	SHARANG 130/155MM_UG_OFB_SLB	UPDATED Sh: 1 of: 1	PREPD GHC JWM/DO; APPROVED DO/DO DIR/ODC
HEAT TREATMENT		1:1 SCALE	A1 SIZE
FINISH	ASSEMBLY 176-1002		ORDNANCE DEVELOPMENT CENTRE, OFC, KANPUR
MATERIAL CASTING 176-1159-C	NAME DEFLECTOR		DRAWING No. 176-1159

केवल निविदा हेतु
सन्दर्भ माँग पत्र सं0 380148
दिनांक 23-04-2018

NOTES:
1 CASTING ACCORDING TO SPEC No342 cl. C
2 UNSPECIFIED RAD's - 3 mm

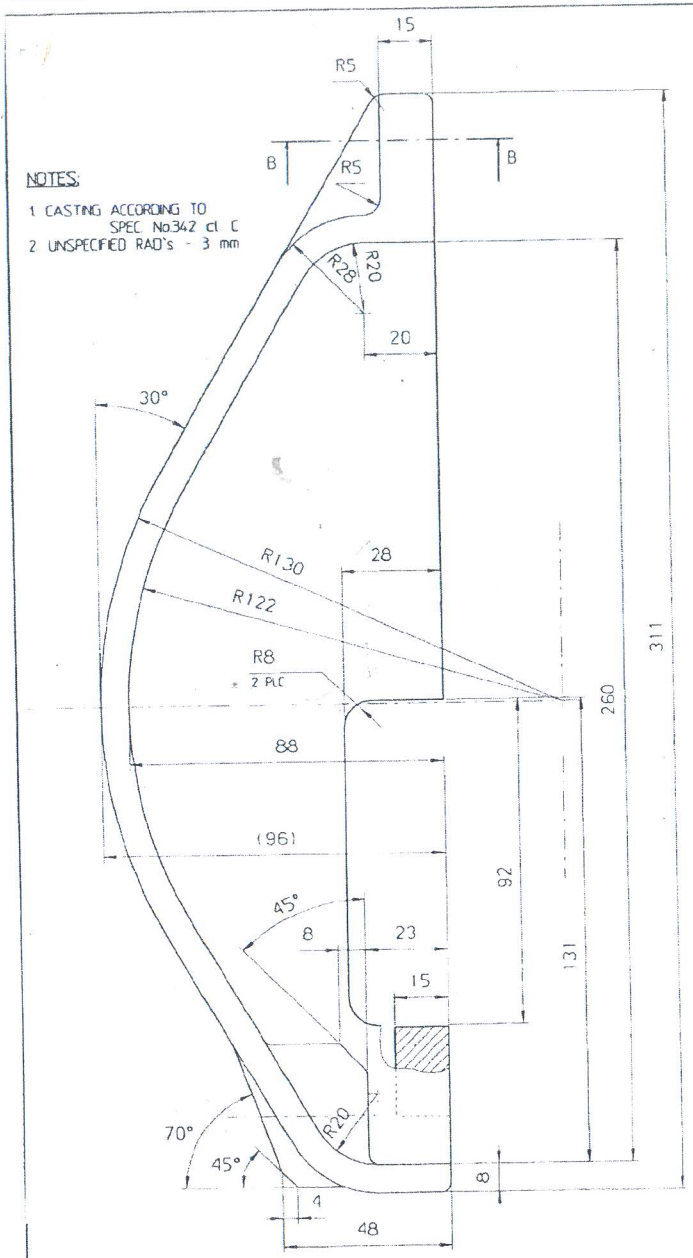

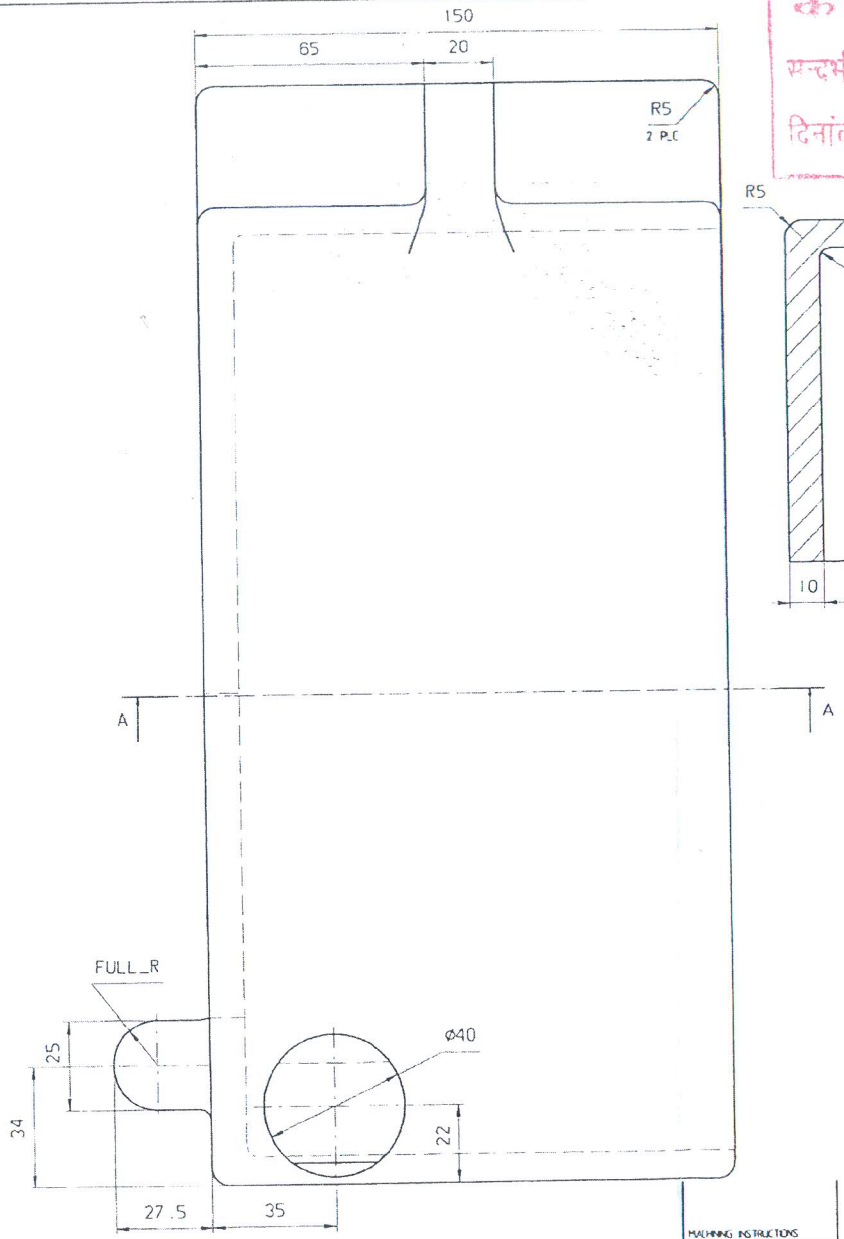

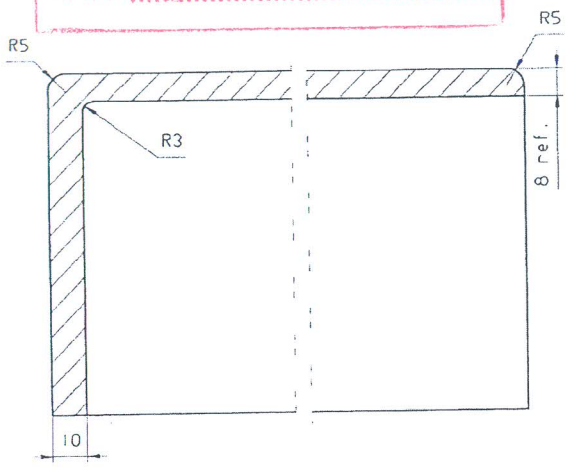

SECTION A-A

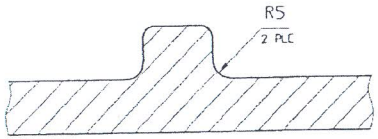

SECTION B-B

for trade Only

Dimensione without tolerances

From		6	10	14	18	24	30	40	50	60	80	100	120	140	160	180	200	225	250	280
To	6	10	14	18	24	30	40	50	60	80	100	120	140	160	180	200	225	250	280	315
Tol.	±0.10	±0.12	±0.15	±0.20	±0.25	±0.30	±0.37	±0.44	±0.52	±0.60	±0.68	±0.76	±0.84	±0.92	±1.02	±1.12	±1.28	±1.44	±1.64	±1.84

MACHINING INSTRUCTIONS
UNSPECIFIED TOLERANCES FOR DIMENSIONS AND ANGLES
DIMENSIONS
ANGLES ±30'
HEAT TREATMENT
NORMALIZED
FINISH
MATERIAL
CAST STEEL
DIN 1681-GS-52

ITEM	DESCRIPTION		NO OFF	MATERIAL	TREATMENT	REMARKS
SCALE NTS		COMPONENT	STOR. DRG. NO. 176-1159-C	FIELD GUN FACTORY KANPUR		
UNSPECIFIED TOLERANCES IS : 2102 MEDIUM						
2018	DATE	NAME	DEFLECTOR CASTING	APPROVED		
DRN.						
CHD.						
TCD.						
CDRP.						
DWN/TD				DRGND-176-1159C		
CKD/SP				SHTS. 1	SHT. NO. 1	