SEALED

AMENDMENTS

DATE & INITIALS	NATURE
10-3-81	D.C.(I)- 4265-I- DRG. METRICISED & SEALED IN SUPERSESSION OF EXISTING ONE.
23.5.88	(S) D.C.(I)- 5253-I- NOM. AMENDED & CAT/PT. No. AMENDED.

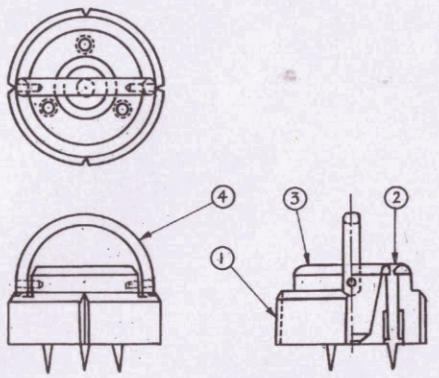

GENERAL ARRANGEMENT

1

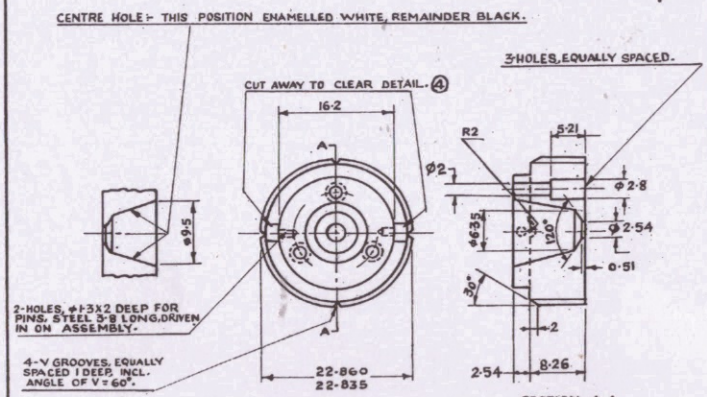

FINISH:- CAD PLATED.

MAT.:- GUN METAL CASTING, IS:306.

1 TO A SET.

NOTE:-
(1) PAINT PFU. ENAMEL HIGH CLASS WHITE TO SPECN. IND/SL/3222 (LATEST)
(2) PAINT PFU ENAMEL HIGH CLASS BLACK TO SPECN. IND/SL/3222. (LATEST)

FOR EXPLANATION OF DIMENSIONING ETC., SEE CII TECH. INSTRUCTIONS NO. 01. THIRD ANGLE PROJECTION DIMENSIONS ARE IN mm.

	DESIGNATION OF PARTS
1.	BASE, WITH 2 HANDLE PINS.
2.	PIN, POSITIONING.
3.	PLATE POSITIONING PINS.
4.	HANDLE.

2

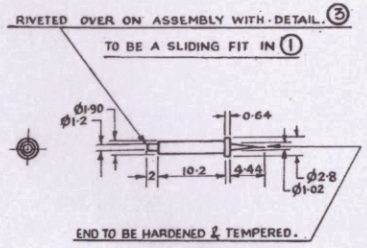

FINISH:- CAD. PLATED.

MATL:- STEEL, IS:2073/C.40 IN 'N' CONDITION.

3 TO A SET.

3

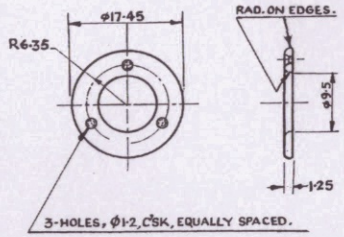

FINISH:- CAD PLATED.

MATL:- GUN METAL CASTING, IS:306.

1 TO A SET.

4

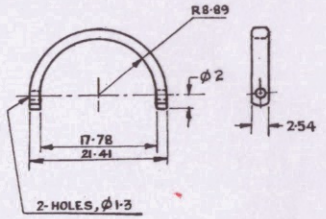

FINISH:- CAD. PLATED.

MATL:- GUN METAL CASTING, IS:306.

1 TO A SET.

FOR TRADE ONLY
Date of Issue 04/01/4

NOTE:-
(1) PIVOTS WILL BE TESTED BY PLACING THEM, PINS DOWNWORDS ON A HARD WOOD BLOCK.
(2) THE PINS MUST FULLY ENTER THE RECESSES WITHOUT PRESSURE BEING PLACED UPON THEM.
(3) ALL EXTERIOR SURFACES EXCEPT BEARING SURFACES TO BE LACQUERED.
(4) PRETREATMENT WITH PAINT PRIMING ETCHING COMPRISING ACCELERATOR AND BASE TO SPECN. D.T.D 868 (BOTH SHOULD BE PURCHASED FROM ONE & THE SAME FIRM FOR REASONS OF COMPATIBILITY) FOLLOWED BY ONE COAT OF PAINT P.F.U PRIMING G.S. BRUSHING RED OXIDE OF IRON ZINC CHROMATE (CAT NO.- 1HA 0648) TO SPECN. IND/SL 3199

SCALE:- 2:1

D.C.(I):- 9312-S, 9483-G, 936-S, 4975-S, 1220-SS, 1182-I, 1214-I, 1876-I, 1818-I, 2365-I, 3204-I, 4265-I, 5253-I

TRACED AT CII DEHRADUN
TRACED BY:-
CHECKED BY:-
DATE:- 3/2/81

C.I.A. (O.S.)
560

1 SHEET SHEET 1

CAT/PART No:- 1220-000487

PIVOT, ARTILLERY BOARD, No 2, MARK I|L GUNMETAL, FOR BOARDS, ARTILLERY, Nos. 2, MKS. 1, 1A & 2A AND 3, MKS. 1

GENERAL ARRANGEMENT & DETAILS.