DRG NO	IC	SS	S	AA	A	C	SST
	0204	03	01				

GEN.TOL. : ±0.2

DRAWING CONVENTION CONFIRM TO INDIAN STDS.
DIMN.IN mm UNLESS OTHERWISE STATED

CONTROL COPY No.

NOTES:

1) REMOVE ALL SHARP EDGES AND BURRS.
2) HARDNESS: 300–350HV
3) ALT. PROTECTIVE FINISH: Ni–PTFE, 20 µm THICKNESS.

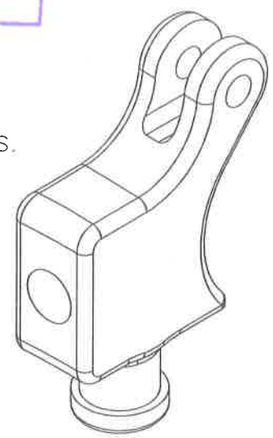

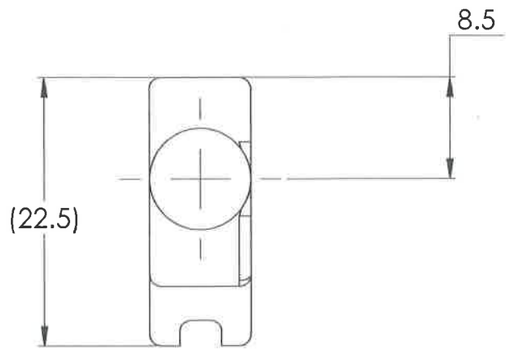

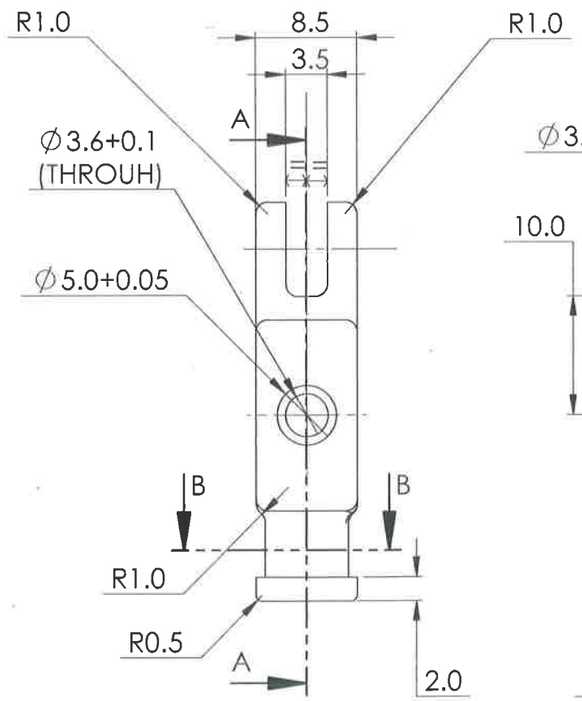

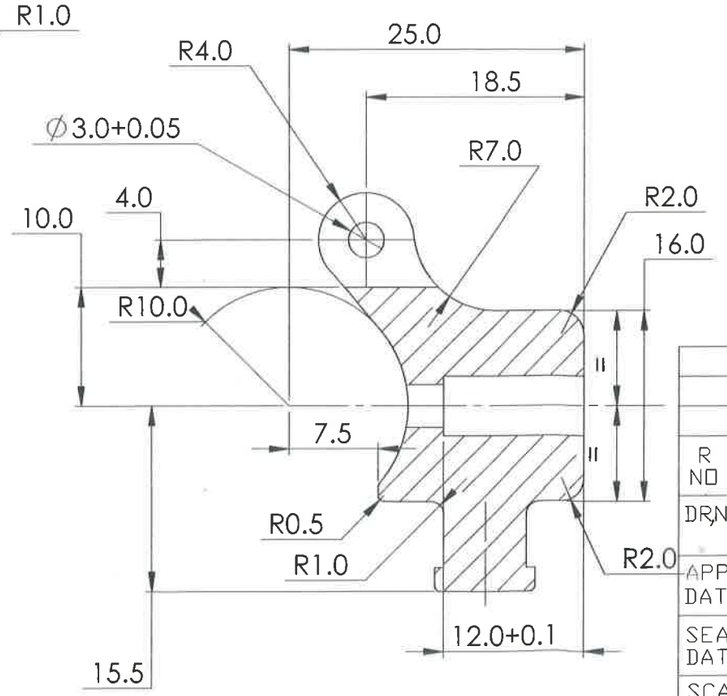

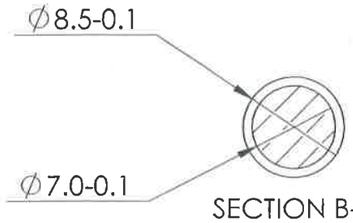

SECTION B-B

SECTION A-A

R NO	DATE	AUTHORITY	BRIEF RECORD	ZONE	CD	GD
					SIGN	

DRN SD | CHD | APPD DATE 15/4/15 FOR DIRECTOR | SEALED DATE | SCALE 2:1 | EST MASS | DESIGN AUTHORITY ARDE

MATERIAL
STEEL TO IS: 5517:1993,Gd-40Ni6Cr4Mo3 (EN-24)

PROTECTIVE FINISH
PHOSPHATED TO SPECN IS:3618-1966, CLASS B

TITLE
HOUSING HOOK SLING

DRG NO	IC	SS	S	AA	A	C	SST
	0204	04	03	00	02	004	00DA

PART NO | DS CAT NO | AHSP