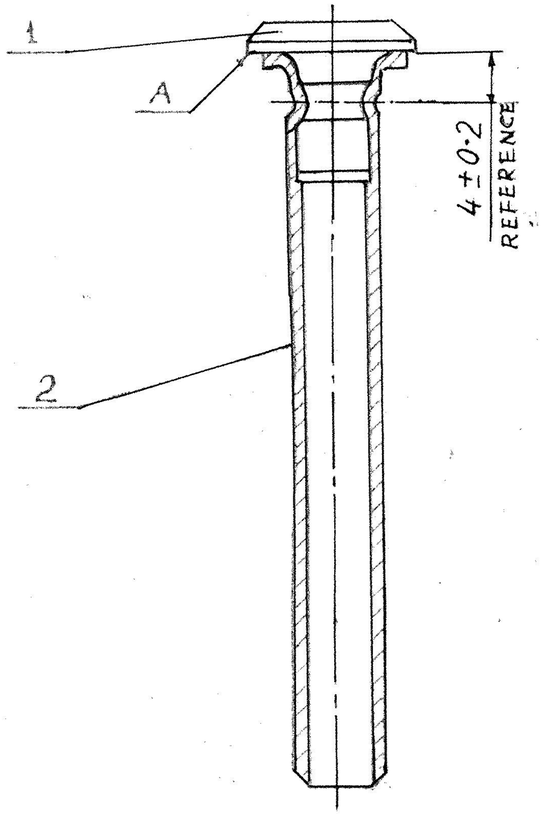


1. CONTACT 1. TO BE PUT IN TILL IT STOPS AND PRESSED.
2. ROTATION OF THE CONTACT 1 IS NOT PERMITTED.
3. AFTER PRESSING GAP BETWEEN FACE 'A' AND TUBE '2' IS PERMITTED.

| Sl. No. | Code | Nomenclature | Qty. | Note |
|---|---|---|---|---|
| 1. | 1-1 | Contact | 1 | OTF/PG/008 |
| 2. | 1-2 | Tube | 1 | OTF/PG/004 |

| | | |
|---|---|---|
| | 3 - 024044 | 3 B 15 |
| | Contact with Tube | Cd 1-1 |
| | | SCALE 2:1 |

| | | | | | | |
|---|---|---|---|---|---|---|
| | 28·10·85 | D.C.I. 33853-A | DRG. SEALED PROV. | | | |
| R No. | DATE | AUTHORITY | REVISION. | ZONE | AHSP SIG. | D.O. |

APPD. FOR C.I.(A)

AHSP:-CIA KIRKEE

OTF/PG/010

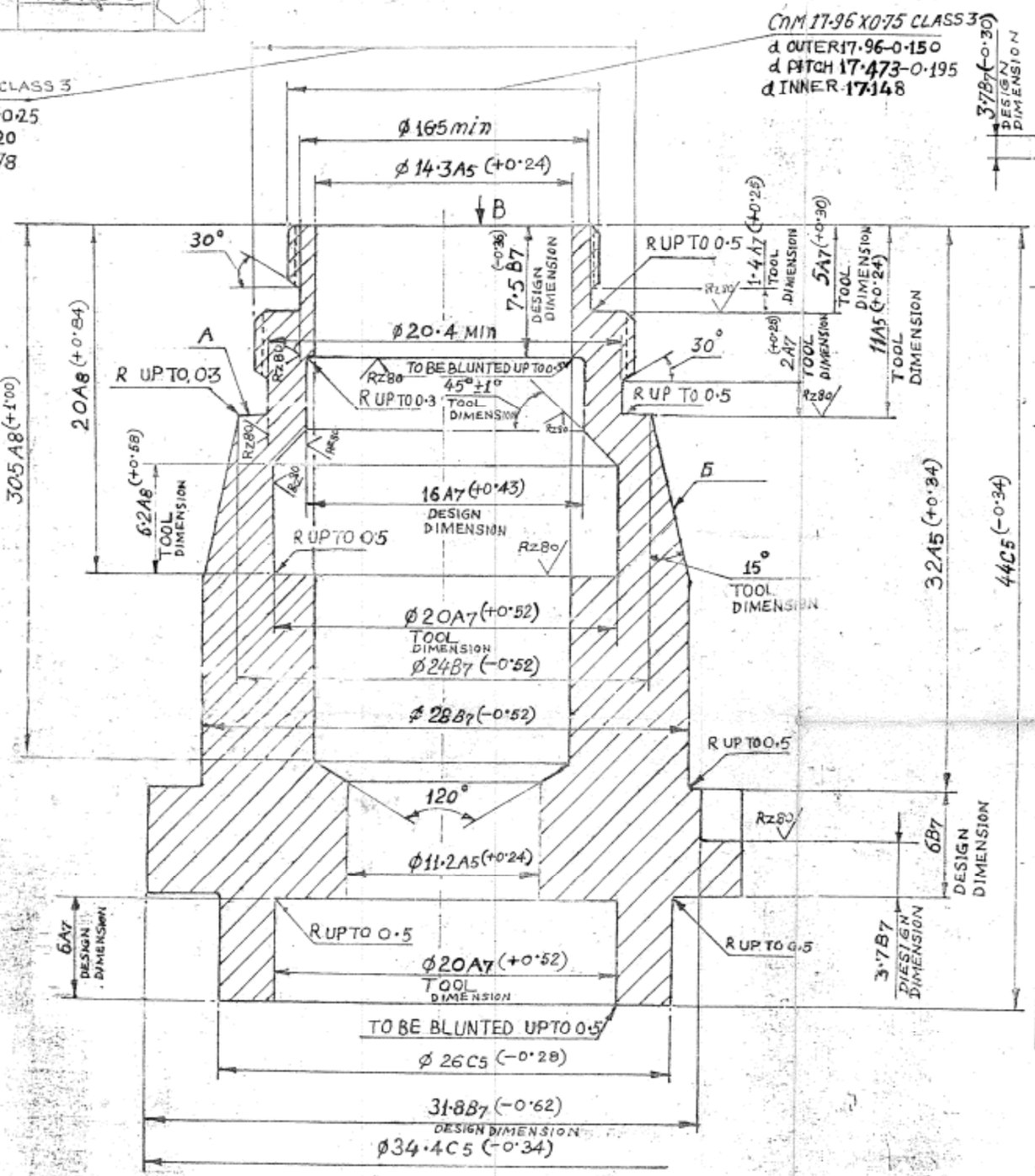


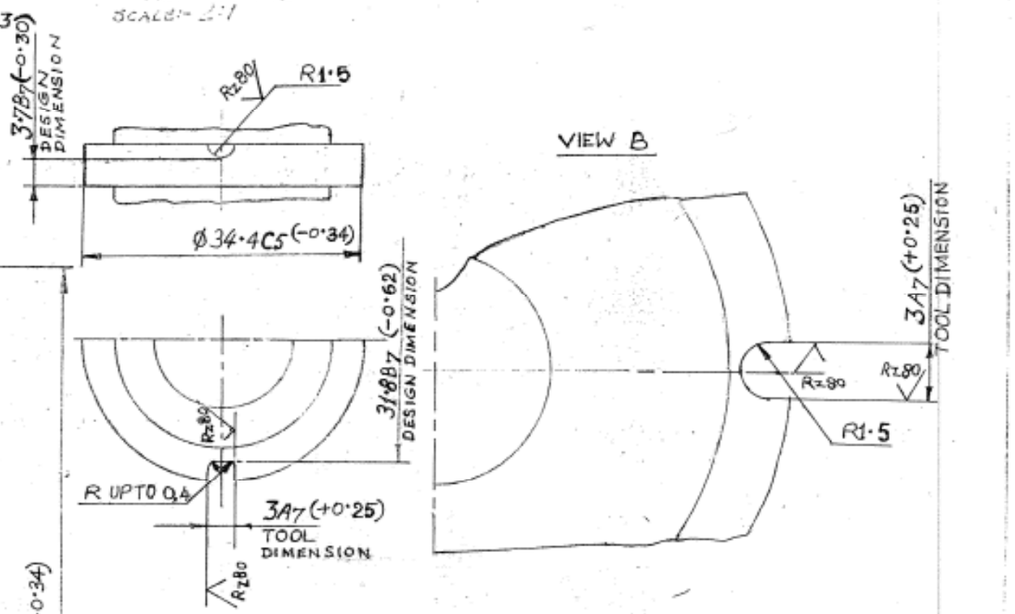


* GRAIN GROWTH.

1. MARK WITH TYPE 2·5 - 3
   DEPTH OF THE MARKING SHOULD NOT EXCEED 0·5 mm.
   TRACES DUE TO ROLLING IN THE FORM OF SHORT DASHES IN QUANTITY NOT MORE THAN 5 PIECES WITH DEPTH 0·3 mm ARE ALLOWED
   YEAR OF MANUFACTURING IS APPLIED IN THE FORM OF TWO LAST DIGITS OF CURRENT YEAR.
2. ON THE SURFACES ø16·5 MIN AND ø 20·4 MIN TRACES DUE TO THREAD CUTTING TOOL ARE ALLOWED.
3. DEVIATION FROM PERPENDICULARITY OF THREAD CnM 21·96X1 CLASS3. TO THE SURFACE A SHOULD NOT BE MORE THAN 0·08 mm.
4. MACHINING OF OUTER SURFACE CAN BE CARRIED OUT IN ASSEMBLY Cδ1-2.
5. COATING :- CHROMATE PASSIVATION AS PER DEF. 130
6. MATERIAL ALLOWED : BAR A 16T KP GOST 21488-76.
7. STAMPING IS ALLOWED TO BE CARRIED OUT IN ASSEMBLY Cδ1-2
8. IN CASE OF MANUFACTURING PART 1-2 WITH ø8·6-0·15 INSTEAD OF ø11·2 A5 ø 11·8 A 5 TO BE MANUFACTURED.
9. SPANNER SLOT CAN BE PREPARED AS PER VARIANT.

INDIGENOUS EQUIVALENT MATERIAL :- ALUMINIUM ALLOY TO SPEC. IS 733 DESIGNATION 24345 IN 'W' CONDITION OR BS 1474 GRADE 2014A IN T4 CONDITION. (LATEST ISSUE) COMPONENT SHOULD BE FREE FROM PERIPHERAL ★

| R NO | DATE | AUTHORITY | REVISION | ZONE | AHSP |
|---|---|---|---|---|---|
| | 19-9-94 | D.C. 35811-A | INDIGENOUS EQUIVALENT MATERIAL ADDED | | |
| | 13-12-93 | DC 35634-A | NOTE-5 DELETED & ANODISED | | |
| 2 | 19-7-91 | DC 35138-A | * SHOWN NEAR MARKINGS ON DRG. REGARDING * ADDED. | | |
| 1 | 9-4-87 | D.C. 34107-A | IN SECTION VIEW, FLANGE THICKNESS 3·787 SHOWN CORRECTLY SECTIONED | | |
| | 28-10-85 | D.C.I. 33853-A | DRG. SEALED PROV. | | |

APPD.

FOR C.I. (A)

AHSP: CIA KIRKEE

3-024044 — 3B15

**BODY**

1-3

OTF/PG/009

BAR A 1T-KP
GOST 21488-76

SCALE 5:1

| R NO | DATE | AUTHORITY | REVISION | ZONE | AHSP |
|---|---|---|---|---|---|
| | 26-8-97 | DC 36525-A | INDIGENOUS EQUIVALENT MATERIAL | | |
| | 7-3-96 | DC 35095-A | COMPONENT - GRAIN GROWTH ADDED. | | |
| | | | NOTE No. 5 AMENDED. | | |
| | | | REVISION | | |

* NOTE-FOR MARKING ON INDIGENOUS PRODUCTION REFER DRG No CQA(A)/AMN/2817

EXAMPLE OF MARKING
(DEVELOPMENT Б)

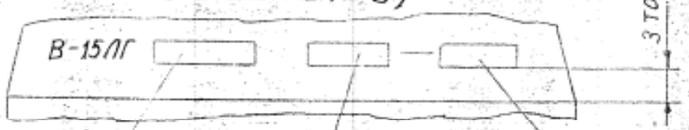


No OR CODE OF FACTORY — BATCH No — YEAR OF MANUFACTURING

3-024044 1-1

R=80 (✓)

INDIGENOUS EQUIVALENT MATERIAL :- STEEL TO SPEC IS6603. GRADE 30 Cr 13 OR 40 Cr 13 H&T TO HARDNESS HRC 40-45. (LATEST ISSUE)

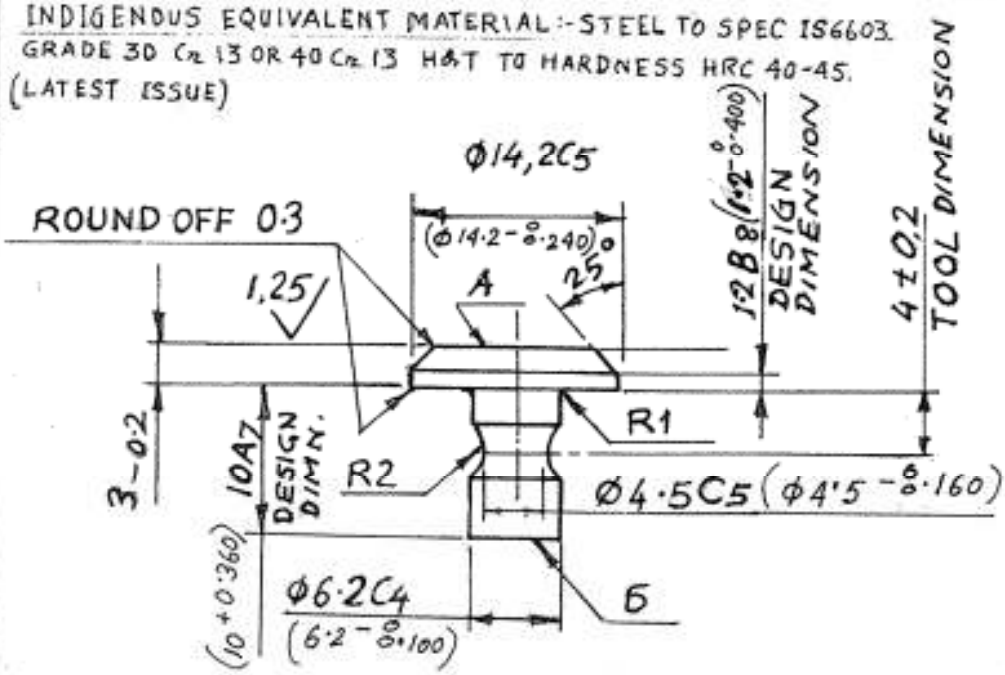


1. Harden HRC 40 To45
2. Concavity or Convexity on the surface A up to 0.03 mm.
3. Checking of hardness is carried out on the surface 6
4. Material Allowed :

   Round bar $\frac{\text{GOST 7417 - 75}}{\text{30 x 13, 40 x 13-T-B Gost 5949-75}}$

5. Material ; Round bar $\frac{\text{GOST 7417 - 75}}{\text{95 x 18-T-B GOST 5949 - 75}}$

| | | | |
|---|---|---|---|
| D.O. | INDIGENOUS EQUIVALENT MATERIAL ADDED | 19-9-94 | DATE |
| AHSP | REVISION | DC 35811-A | AUTHORITY |

| RNo | DATE | AUTHORITY | REVISION | ZONE | AHSP SIG | D.O. |
|---|---|---|---|---|---|---|
| 1 | 9.4.87 | D.C.34107-A | DIMN. 1.2B8 DESIGN WAS 1.2B8 DESIGN | | | |
| | 28.10.85 | D.C.I.33853-A | DRG. SEALED PROV. | | | |

APPD

FOR C.I.(A)

3-024044

3815

Contact

1-1

SCALE 2:1

AHSP = CIA KIRKEE

See above

OTF/PG/008

Cδ1-2 | 3 024044

INDIGENOUS EQUIVALENT MATERIAL :- MOULDING MATERIAL TO SPEC. IND/ME/351 (PROV) GRADE 'A' (LATEST ISSUE)

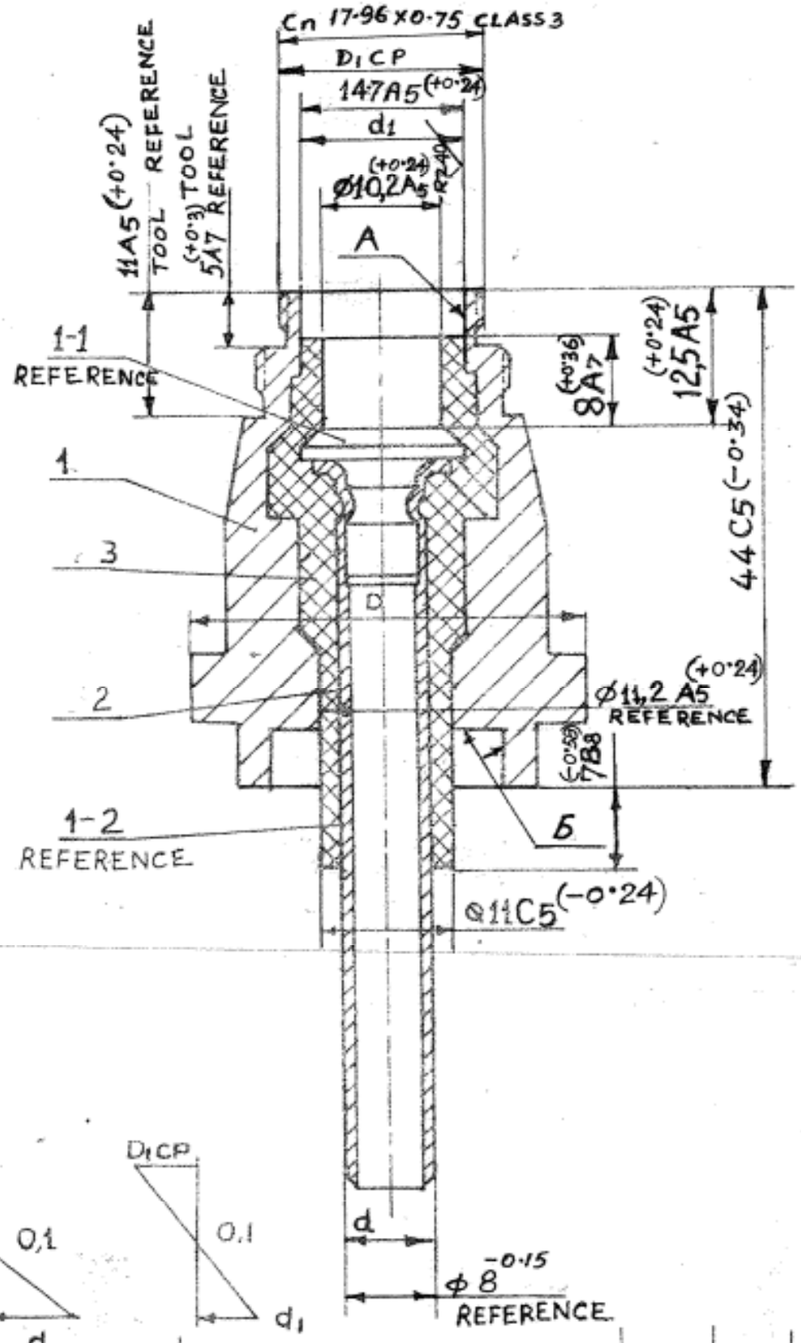


1. Dimensions Ø 10, 2A5, 8A7, and 12, 5A5 are subjected to final inspection. The remaining dimensions to be ensured by tool.
2. The flow of moulding material on the surfaces A and δ is allowed.
3. Check the assembly on breakdown, feeding voltage 4000 V on the body 1 and contact 2. During this, leakage of current should not be more than 0.02 milliampere.
4. Check the continuity of the circuit between part 1-1 and 1-2 in the assembly.
5. After pressing the units are to be checked for 1 minute for airtightness under the pressure of 1.2 absolute atmosphere or vaccum of 0.8 absolute atmosphere.
6. After grinding, the moulding dimensions are permitted : Ø 8 -0·15 part 1-2 upto Ø 8 -0·23 and dimension 44 C 5 part 1-3 up to 44 B7
7. Shoulder on the surface A up to 0.5 high from the surface of the plastic mass is allowed.
8. It is permitted to obtain dimension Ø 8 -0·15 in the unit Cδ 1-2 : in this case part 1-2 must be with dimension Ø 8·6 -0·15 instead of Ø 8·0 -0·15, and part 1-3 with Ø 11.8 A5 instead of Ø 11.2 A5.
9. Decrease of dimensions 5A7 tool, and 11A5 tool on the part 1-3 up to 4.9 mm and 10.9 mm respectively is allowed after pressing the unit.

| Sl. No. | Code | Nomenclature | Qty. | Note |
|---|---|---|---|---|
| 1. | 1-3 | BODY | 1 | OTF/PG/009 |
| 2. | Cδ1-1 | Contact with tube | 1 | OTF/PG/010 |
| 3. | | Moulding Material AF-4 B GOST 20437-75 | | |
| OTF/PG/011 | | 3 - 024044 | 3 B 15 | |
| AHSP:CIA KIRKEE | | Body with Contact. | Cδ 1-2 SCALE 2:1 | |

| R No | DATE | AUTHORITY | REVISION | ZONE | AHSP | D.O. |
|---|---|---|---|---|---|---|
| | 19-9-94 | DC 35811-A | INDIGENOUS EQUIVALENT MATERIAL ADDED. | | | |
| | 28-10-85 | D.C.I. 33853-A | DRG. SEALED PROV. | | | |

APPD FOR CI (A)

| | | |
|---|---|---|
| 3 024044 | | 1:2 |

R2.40 (✓)

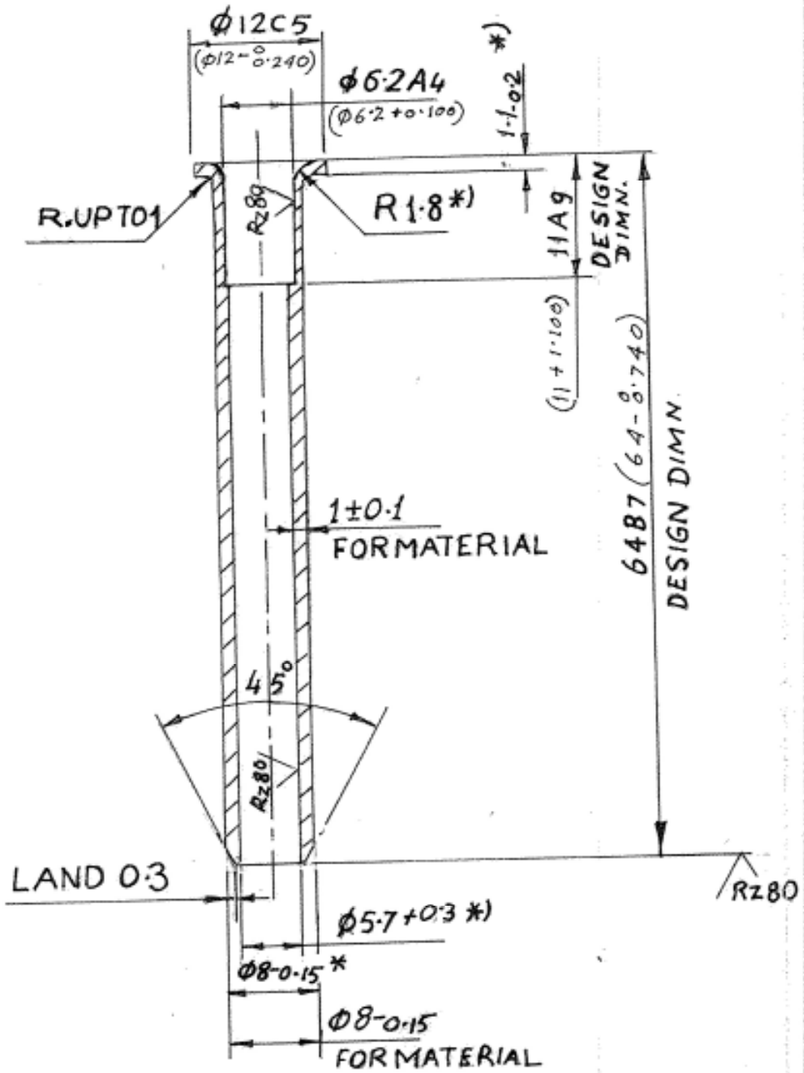


1. Land 0.3 and angle 45° are allowed to be manufactured in the unit C 6 1-1
2. Sizes Ø 8-0.15, 1.1 - 0.2, R 1.8, Ø 5.7 +0.3 marked by asterisk are given additionally when Manufacturing the parts out of bar, size 1 ± 0.1 material is given for manufacturing the Parts out of tubes.
3. Material allowed: Bar A IT KP GOST 21488-76.
4. Size Ø 8-0.15 can be obtained in the units C 6 1-2, in this case instead of Ø 8-0.15, Ø 8.6-0.25 to be manufactured.

   In this case increase of Ø 5.7+0.3 upto size Ø 6.25 on a length of 40 mm from the lower end is allowed.

Circular tube 8 X 1 A IT GOST 18475.73.

INDIGENOUS EQUIVALENT MATERIAL: ALUMINIUM ALLOY DRAWN TUBE TO SPEC IS 738, GRADE 24345 IN 'W' CONDITION. (LATEST ISSUE)

OR

AL ALLOY BAR TO SPECIFICATION IS : 733 GR. 24345 IN 'W' CONDITION

| R.No | DATE | AUTHORITY | REVISION | ZONE | AHSP SIG | D.O. | |
|---|---|---|---|---|---|---|---|
| | 14.11.07 | D.C. 37147-A | INDIGENOUS EQUIVALENT MATERIAL ADDED | | | | |
| | 19-9-94 | D.C.35811-A | INDIGENOUS EQUIVALENT MATERIAL ADDED. | | | | |
| 1 | 9.4.87 | D.C. 34107-A | UNDER NOTE No 4 Ø8-0.15 WAS Ø3-0.15 & DIMN. 5-7+0.3 WAS 5-7±0.3 | | | | |
| | 28.10.85 | D.C.133853-A | DRG. SEALED PROV. | | | | |

APPD. FOR C.1 (A)

AHSP: CIA KIRKEE

| | |
|---|---|
| 3 - 024044 | 3 B 15 |
| TUBE | 1 - 2 |
| | SCALE 2:1 |
| MATERIAL :- SEE ABOVE | |

OTF/PG/004