1005-001625	CAT. NO. D.S.	DIMNS. ARE IN mm.

DIMENSIONS WITH ONE DECIMAL PLACE ± ·4 mm.

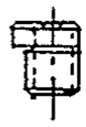

ACTUAL SIZE

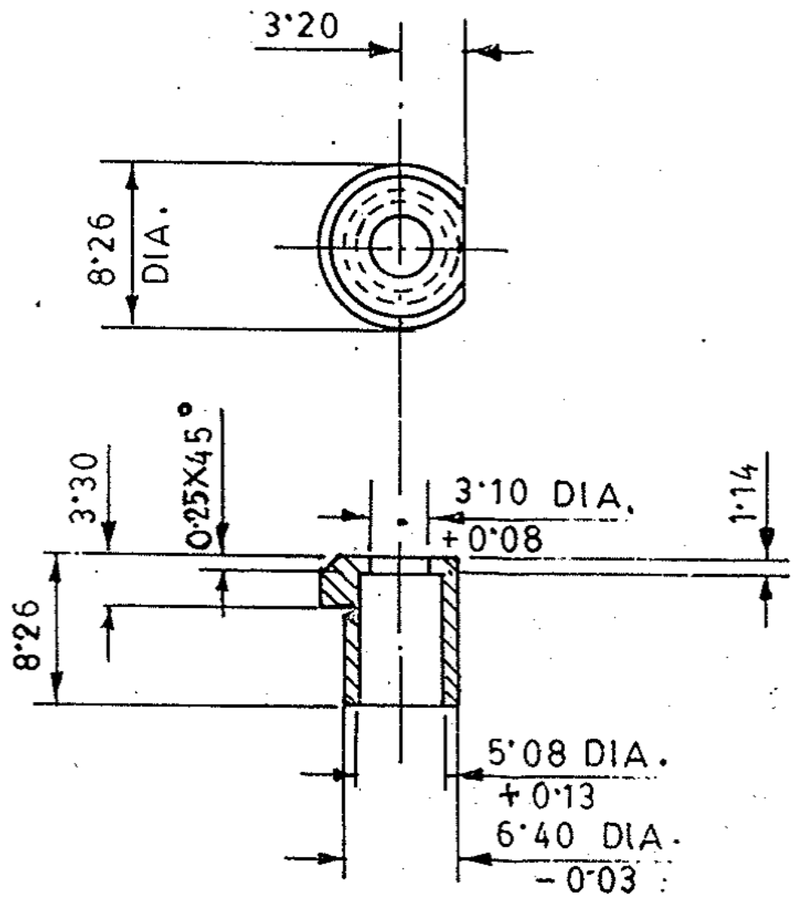

NOTE :—

FOR EXPLANATION OF DETAILS WHEREVER NOT SPECIFIED REFER DD NOTE SHEET NO. 3 (LATEST ISSUE)

METRIC

ICR 1372

31-5-96	23344-SA	PROFORMA CHANGED, TOLERANCE NOTE & MATL. AMENDED. NEG. RE-TRACED & DRG. RE-SEALED.			
		PREV. D C NOS. 10945-SA, 11270-SA, 14640-SA, 19702-SA			COPY.
DATE	AUTHY.	BRIEF RECORD	ZONE	I/C; DO	G.O.
SEALED. D.C 10945-SA, DT. 26.7.71.					SIGN

DRN		CHD		TRD	A. BARIK	COMP.	
SCALE :- 2:1				EST. MASS			
MFG/INSP. INSTRUCTIONS							
DT. 31.5.96	I/C; D.O.			APPROVED. DT. 19.6.67 NEG RE TRACED			

ASSY.	1005-001624 & CISA 450.		
MATERIAL	BS 970 PT.I:1991 SEC.2 Gr.070 M-20 IN COLD DRAWN CONDITION.	AH SP	CQA(SA) ICHAPUR
HT/HARDNESS		DGNR'S REF.	ARDE 657/281
PROTECTIVE FINISH.	ON ASSY.	PART NO.	
		DRG. NO.	
NOMENCLATURE	BUSHING TRIGGER SPRING PLUNGER	DS. CAT. NO.	1005-001625

SL. NO. 83