D.S.CAT. NO. 5310-002660

DIMNS. ARE IN m.m.

NOTE :-
∇ EVERYWHERE

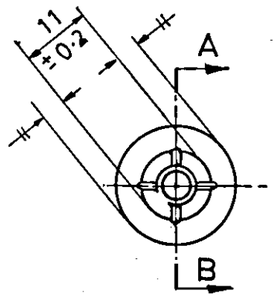

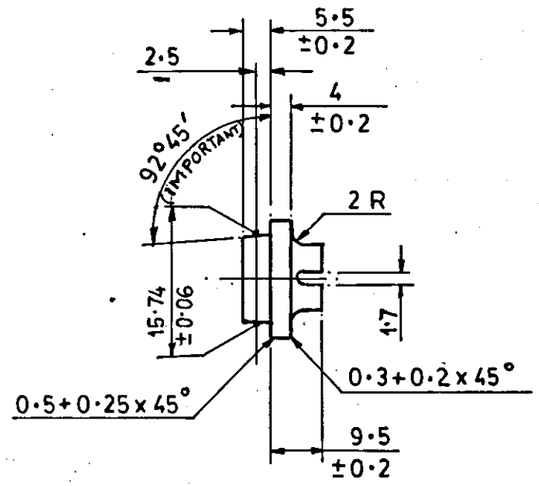

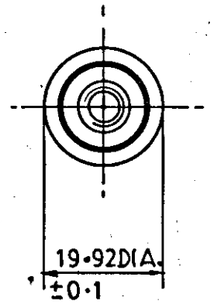

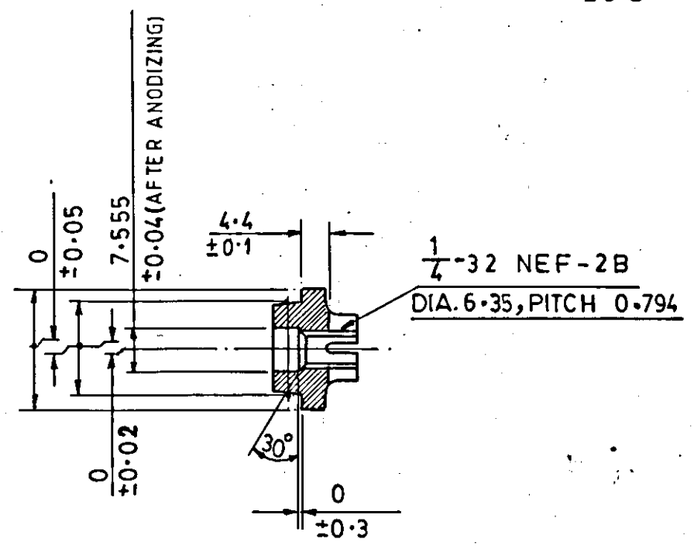

SECTION 'AB'

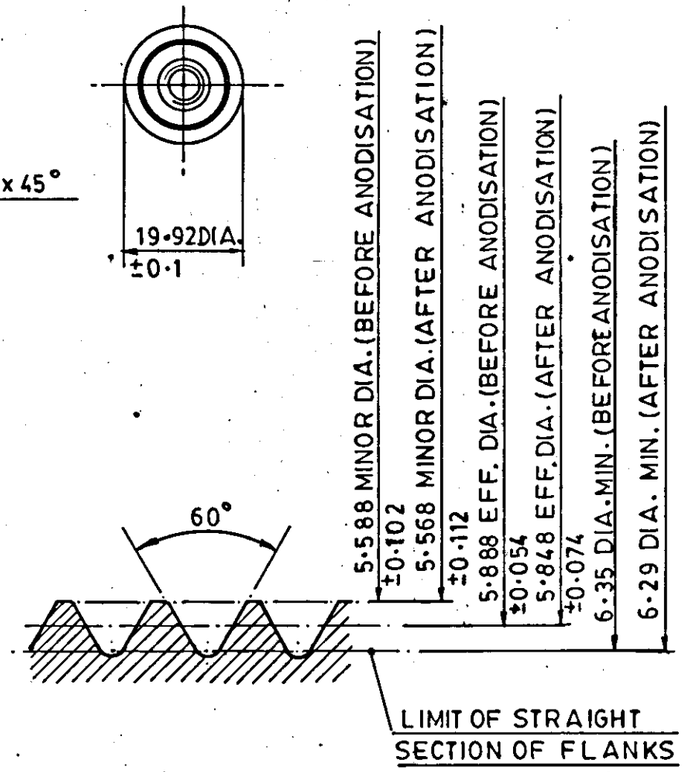

ENLARGED VIEW OF THREAD
SCALE:- 20:1

DATE	AUTHY.	BRIEF RECORD	ZONE	I/C;D.O.	G.O.
30.04.2002	25349-SA	RECORD OF RECEIPT CANCELLED AND DRG. SEALED AFRESH.			DAC
08-6-99	24389-SA	PROFORMA CHANGED, SYMBOL OF FINISH AMENDED, NEG. RE-TRACED AND DRG. RE-SEALED AS A RECORD OF RECEIPT.			DAC
		PREVIOUS D.C. NOS. 15405-SA, 16568-SA, 21445-SA AND 22883-SA.			COPY
SEALED :- D.C. NO. 25349-SA DT. 30.04.2002.				SIGN.	

NOMENCLATURE **NUT RETAINING HANDLE**

DRN. | CHD. | TRD. | COMP.
SCALE 1:1, 20:1 | EST. MASS
APPROVED DT. NEG. RE-TRACED
DT. 8-6-99 I/C;D.O

MATERIAL :- BS 1474:1987 DESIG. 2014 A T6

H.T/HARDNESS :- MAX. 110 HB (10/500) (130 H.V.)

PROTECTIVE FINISH :- ANODIZING AND DYING

AHSP CQA (SA) ICHAPUR
ASSY. 1005-006616
DGNR'S REF.
PART NO. 15 G
DRG. NO A 1496
D.S.CAT. NO. 5310-002660