DRG. No.: - CO - 515

PROVISIONAL

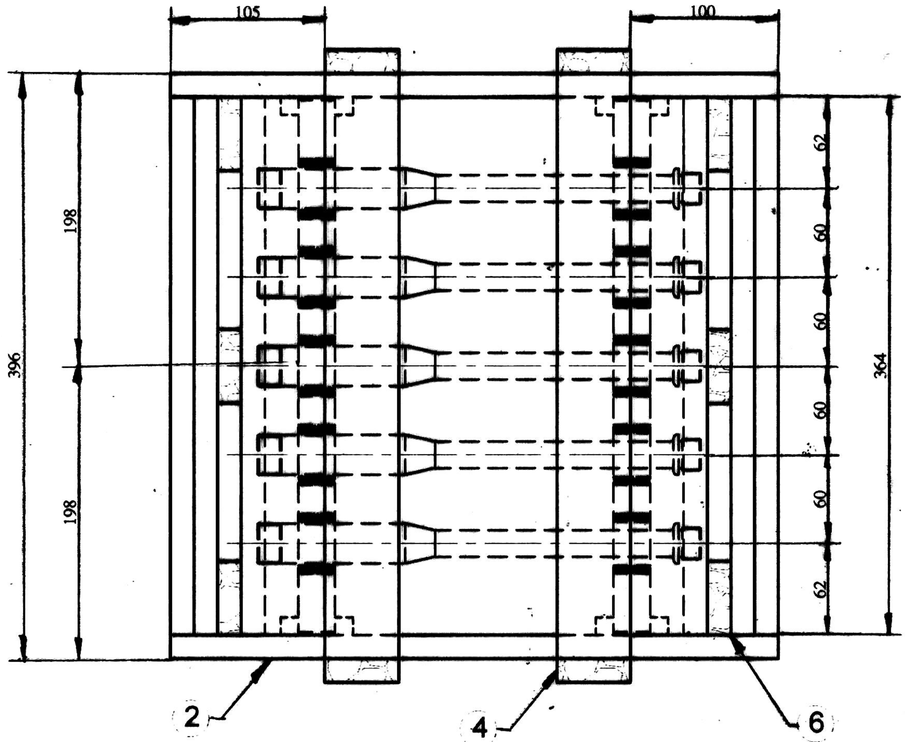

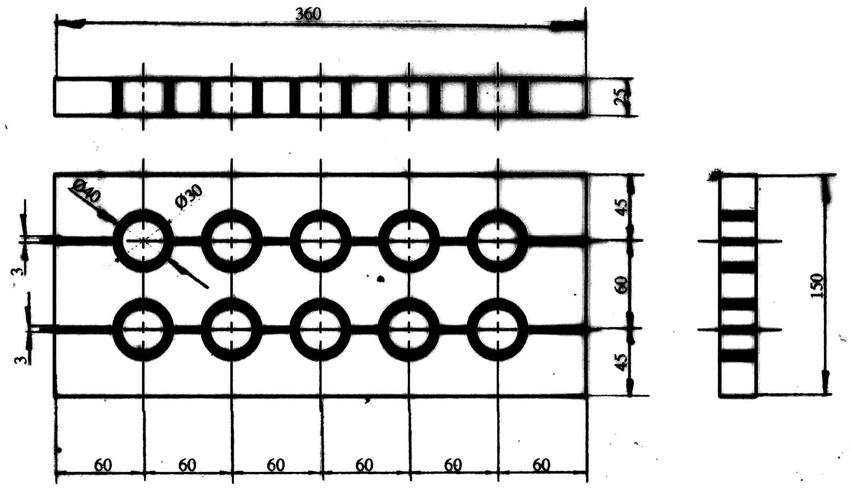

9 **SUPPORT**
(No. OFF - 2)

NOTE : SUPPORT TO BE LOOSE FITTED BETWEEN THE STRIPS

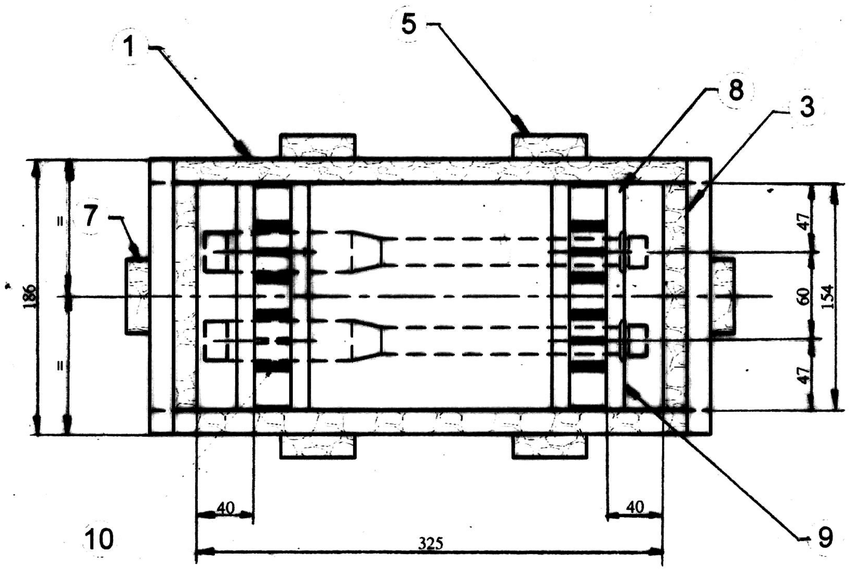

NOTE :

MATERIAL : MANGO WOOD
SPECIFICATION : AS PER SUPPLEMENTARY SCHEDULE No. - CIGS/SS/320 (a).
ALL WOODEN PARTS EXCEPT THE TOP PLANK SHOULD BE FIXED WITH SUITABLE NAILS AT 75 mm GAP.

ALL COMPONENTS SHOULD BE GREASED & WRAPPED WITH WATER PROOF PAPER PROPERLY BEFORE PACKING.

THE TOP PLANK SHOULD BE SCREWED UP WITH SUITABLE SCREWS.

IN CASE OF TRADE FIRM SUPPLY, SAMPLES OF 2/3 No.s ARE TO BE SUBMITTED FOR INSPECTION BEFORE BULK SUPPLY.

TO HOLD = 10 No.s.

THE INNER SIDES OF THE BOX SHOULD BE 5 mm THICK FELT PADED.

ITEM No.	No1 OFF	DESCRIPTION	LENGTH	WIDTH	THICKNESS
10			AS REQUIRED		10
9	2	SUPPORT	AS STATED		
8	8	STRIP	154	12	12
7	2	HANDLE	356	50	16
6	6	END BATTEN	186	50	16
5	4	TOP & BOTTOM BATTEN	364	50	16
4	4	FRONT & REAR BATTEN	218	50	16
3	2	END PLANK	364	154	16
2	2	FRONT & REAR PLANK	389	154	16
1	2	TOP & BOTTOM PLANK	357	396	16

LIST OF PARTS

DT.&SIG.	DESCRIPTION	SCALE :-N.T.S	PROJECTION THIRD ANGLE	COMPT. :- BARREL	STORE DRG. NO. 1055-000543
		DRAWN BY : 3/4/15		WOODEN PACKING BOX (FOR 9mm SUB-CALIBRE)	
		CHECKED BY : 3/4/15			
		APPROVED BY : 03.04.15		DRG. No. :- CO - 515	
		CONCURRED BY : 4.4.15			NO. OF SHTS. :- 1
AMENDMENTS		DATE	SIGN.	G. & S. FY. COSSIPORE	SHEET NO. :- 1

THE DRAWING IS PREPARED AS PER MEMO No. 107/050/Packing Box/14-15 Dated 09/02/2015