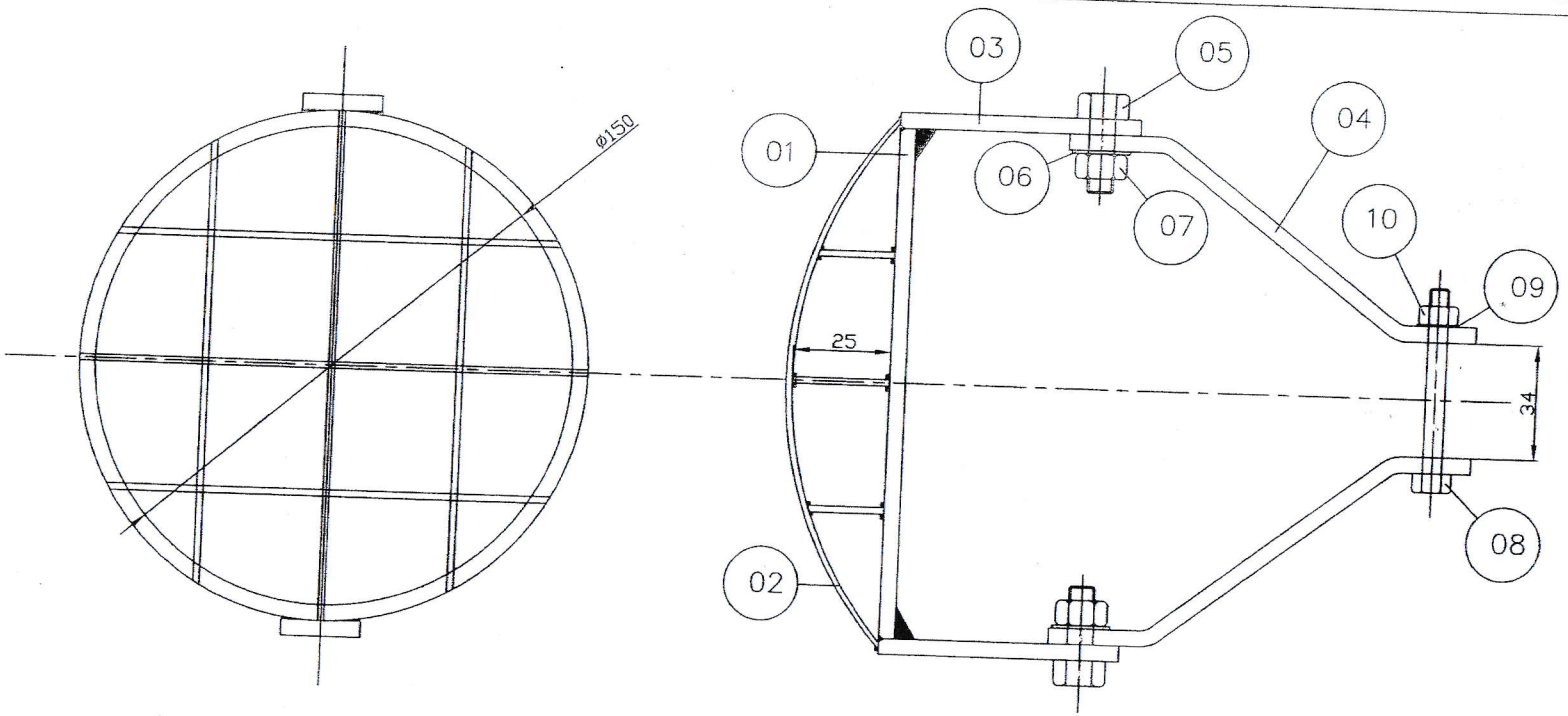

ITEM NO. 3

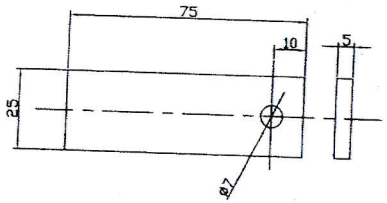

ITEM NO. 4

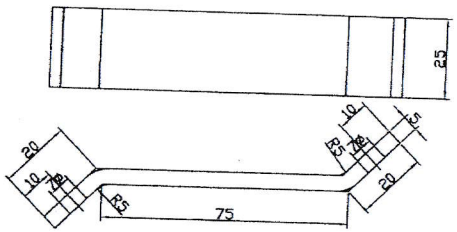

NOTE:-

1 - PILOT SAMPLE TO BE CHECKED FOR FITMENT TRIAL BEFORE BULK PRODUCTION

2 - ALL DIMENSIONS ARE GIVEN IN MM ONLY

3- QTY. OF THIS ASSY REQD 2/VEH

ITEM	DESCRIPTION	NO OFF	MATL	STD	SIZE/WT	REMARKS
10	STD. NUT	01	13.4	STD	M-6	——
09	STD. WASHER	01	13.4	STD	M-6	——
08	STD. BOLT	01	13.4	STD	M-6 X 55L	——
07	STD. NUT	02	13.4	STD	M-6	——
06	STD. WASHER	02	13.4	STD	M-6	——
05	STD. BOLT	02	13.4	STD	M-6 X25 L	——
04	M S PLATE	02	13.4	—	110X25X5	——
03	M S PLATE	02	13.4	—	75X25X5	——
02	CURVED BAR	06	13.4	—	4 ø WIRE X170L	——
01	ROUND BAR DISC	01	13.4	—	6ø WIRE X 505L	——

INDEX	ALTERATION	DATE	SIGN

DIM.	TOL.
0-30	± 0.1
30-250	± 0.2
250-800	± 0.3
800-2000	± 0.5
>2000	± 0.8

COVER FOR FOG LAMP FOR MPV

T. S. S — VEHICLE FACTORY JABALPUR

JWM/TSS	WM/C	
C. SINGH DRN	CKD	APPD
SHOP MADE REF.DRG.NO		1:1 SCALE
—— MACHINE		7.9.2017 DATE
M. P. V. REF.DEM.NO		1/1 SHTS
AHSP/TSS/MPV/003		