675-78-Sb103Sb

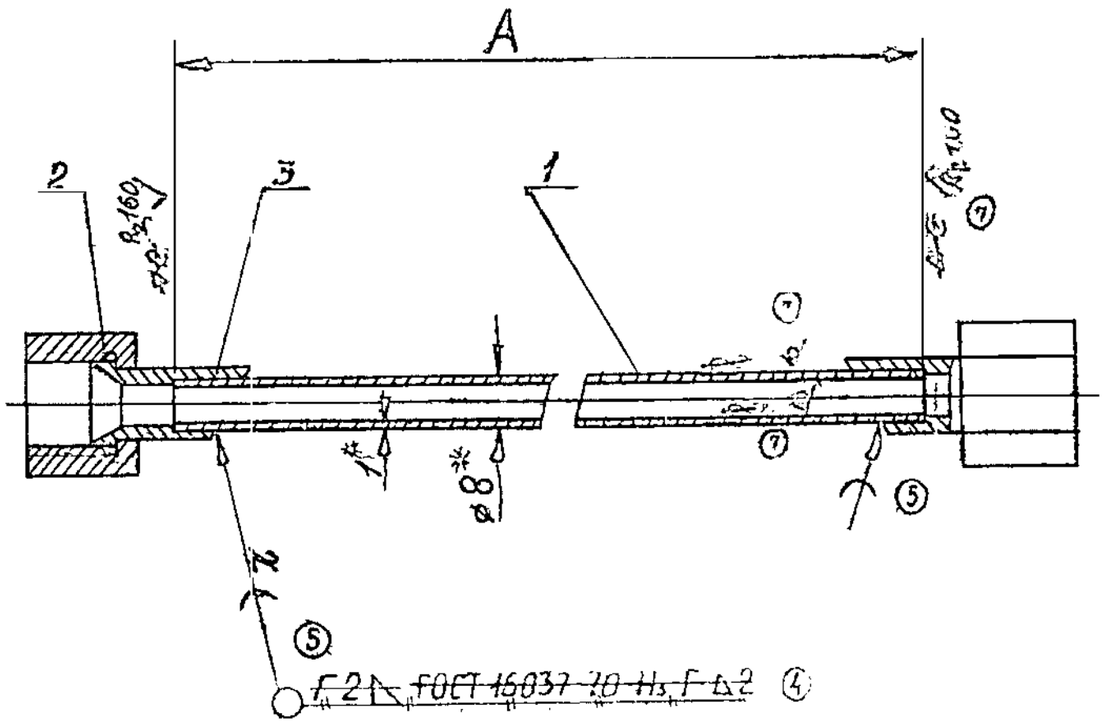

TECHNICAL CONDITIONS

Designation	Pipe		Mass of assembly
	Designation	A, mm	
675-78-c6103	675-78-3	1505 ~~1990~~ ±2	0.413
-01	675-78-4	1460 ~~2090~~ ±2	0.432
675-78-c6103-02	675-78-9	2265 ~~2175~~ ±2	0.414
675-78-c6103-03	675-78-10	2440 ~~2180~~ ±2	0.425

(A)

1. Test pipe for air leakage in water bath at pressure of (18^{+5}) kgf/cm^2 for at least 30 s. Air bubbles are not tolerable.
2. Other requirements - according to 765-78-101 TT.
3. *Sizes are given for reference.

DC (I) No. & DATE	ISSUE	NATURE
00555-ICV 23-4-96	(A)	675-78-cδ103-L, WAS 1990 675-78-cδ103-01-L, WAS 2090 675-78-cδ103-02L, WAS 2175 675-78-cδ103-03-L, WAS 2180

AMENDMENTS

MATERIAL:-

ALL SHARP EDGES & CORNERS TO BE ROUNDED OF DRG. NOT TO BE SCALED	ALL THREADS TO CONFORM TO SPECIFICATION	STAMP OR ETCH, PART NO. MANUFAC--TURERS NAME & YEAR OF MFR.
SCALE: 1:1	TOLERANCE ON DIMENSIONS UNLESS OTHERWISE SPECIFIED	USED ON: 675-78-Sb2
DATE:- 10-01-1996		
DRN. / TCD.	WEIGHT: (Kg.) SEE TABLE	675-78-Sb103Sb
CHD. / APD.		PIPE

CONTROLLERATE OF QUALITY ASSURANCE
(INFANTRY COMBAT VEHICLES)

A3

700-30-241

Rz 80 (✓)

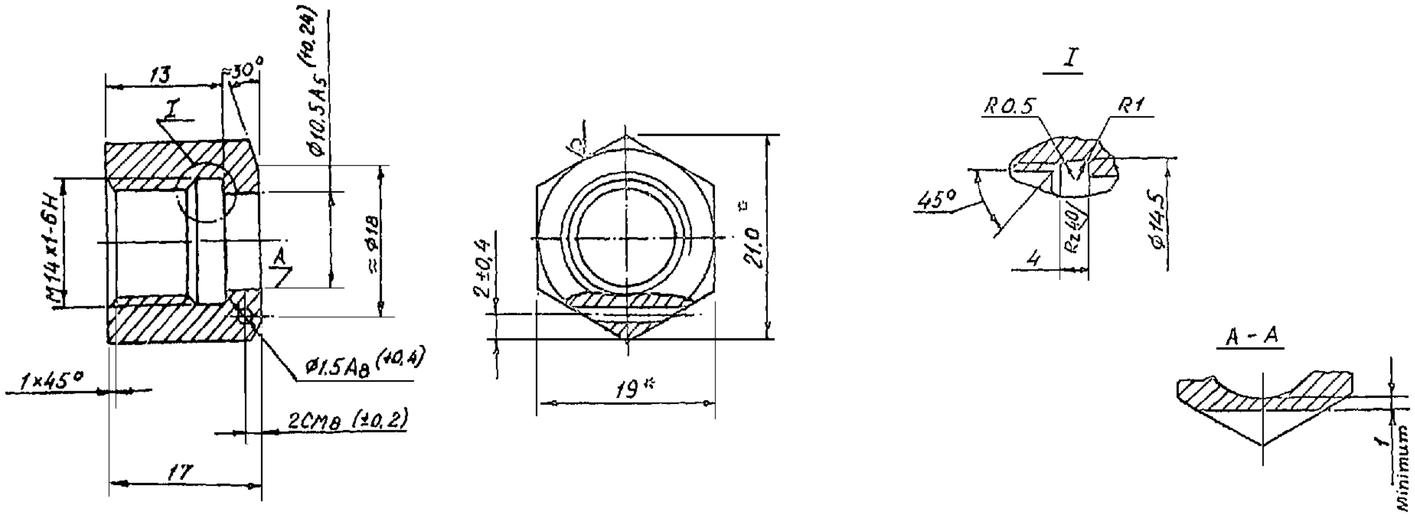

TECHNICAL CONDITIONS

1. ALTERNATE MATERIAL IS STEEL 25, 30, 35 AND 40 GOST 1050 – 74
2. UNSPECIFIED LIMIT DEVIATIONS OF DIMENSIONS ARE AS FOLLOWS : FOR HOLES – AS PER A7, FOR SHAFT - AS PER B7 AND FOR THE REST AS PER CM7
3. DISPLACEMENT OF SURFACE ' A' WITH RESPECT TO THREAD SHOULD NOT EXCEED 0.2 MM.
4. * DIMENSIONS ARE GIVEN FOR REFERENCE.
5. COATING ZINC – PLATED, 9 MICRONS THICK CHROMATIZED, REMOVE HYDROGEN EMBRITTLEMENT COATING ON INTERNAL SURFACE NEED NOT BE CHECKED.
6. ROD WITH MINIMUM DIAMETER OF 1 MM SHOULD PASS THROUGH HOLE Б

EQUIVALENT MATERIAL - IS 45 C8 Gr 2 to is 9550 – 80

EQUIVALENT MATERIAL .- CLASS 4 TO IS . 2004 – 78

EQUIVALENT MATERIAL :- (a) STEEL BAR C 45 TO IS : 2073 – 70 OR EN 8 TO BS . 970 OR EN - 8 / EN 9.

EQUIVALENT MATERIAL . - CARBON STEEL C 50, C 40, C 30, C 25 TO IS 1570 - 61

ALTERNATE-1

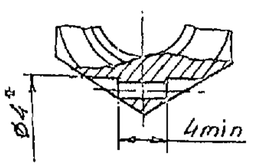

ALTERNATE-2

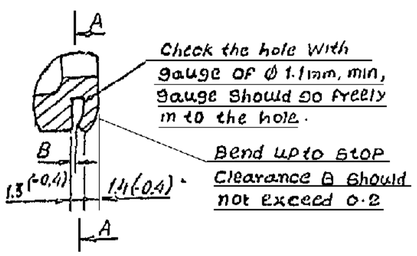

ALTERNATE-3

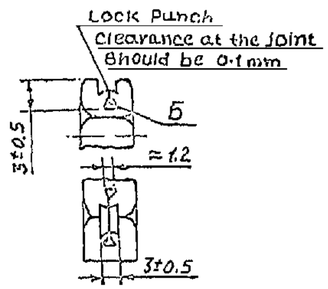

NEAREST EQ. MATERIAL HEXAGON BAR 19.5, GOST 8560-78 / 45-B, GOST 1051-73	00951-ICV 18-11-02 DC(1)No. & DATE	Ⓐ ISSUE	DRAWING REVISED & RETRACED.
ORGL MATERIAL:-			AMENDMENTS
ALL SHARF EDGES & CORNERS TO BE ROUNDED OFF	ALL THREADS TO CONFORM TO SPECIFICATION		STAMP OR ETCH, PART No. MANUFACTURER's NAME & YEAR OF MFR.
DRG. NOT TO BE SCALED			
SCALE: 2:1	TOLERANCE ON DIMENSIONS UNLESS OTHERWISE SPECIFIED		USED ON:
DATE : 18-11-02			
DRN. MS Reddy TCD. MS Reddy CHD APPD	WT :- (Kg) 0.023	700-30-241	
		UNION NUT	

CONTROLLERATE OF QUALITY ASSURANCE (INFANTRY COMBAT VEHICLES)

700-31-576

All over.

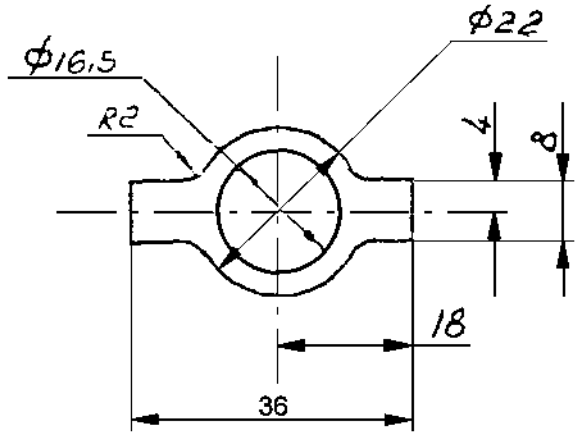

Thickness is 1±0,09.

1 Provide dimensions with an accuracy of ±0.3 mm.

2. Blunt sharp edges.

3. Coating: Zinc-plated, 9 microns thick, chromatized. Remove hydrogen embrittlement.

4. Alternate material is Steel 08kn, 10, GOST 1050-74.

Ⓐ EQ. MATERIAL:- Gde 'D' To IS:513-94.

DC(I)No. & DATE	ISSUE	AMENDMENTS
01005-ICV 24 OCT 05	Ⓐ	EQ. MATERIAL ADDED.

APPROVED	M.VASU	700-31-576		
CHECKED	B.MURTHY			
CONTROLLERATE OF QUALITY ASSURANCE (ICV)		WASHER	WEIGHT 0.002	SCALE 1:1
			SHT	SHTS
		10кп GOST 1050-74		

A4

700-38-1679

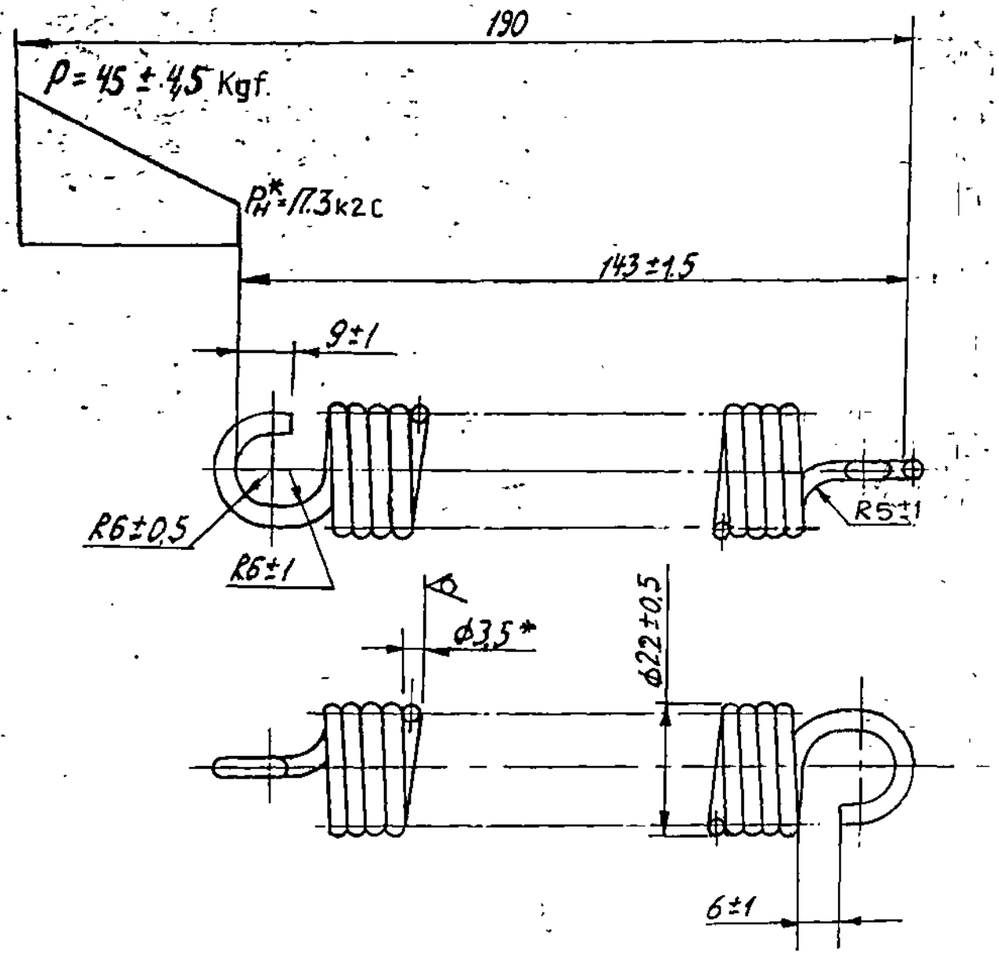

1. Shear modulus $G^* = 8000$ Kgf/mm^2.
2. Tangential twisting stress (Maximum) $\tau_3^* = 76$ Kgf/mm^2
3. Total length of the spring $L^* = 1660$ mm.
4. Number of working turns $n = 30.75$
5. Winding direction is arbitrary.
6. Displacement of plane of hooks from the spring axis should not exceed 2 mm.
7. Relative non-squareness of hooks should not exceed 15°.
8. * Dimensions are given for reference.
9. Coating: Chemically parkerized, accelerated, chromatized, oiled with preservative oil K-17 GOST 10877-76 as per Instructions 053 25289.00002 or coated with varnish KO-815 GOST 11066-74.

(A) EQ. MATERIAL:- SPRING STEEL Gde 3 To IS 4454 (Pt-I)

DC(I) No & DATE	ISSUE	AMENDMENTS
0100 B ICV 24 OCT 08	(A)	EQ. MATERIAL ADDED

APPROVED	M V S	700-38-1679	71/113	
CHECKED	B M S REDDY			
CONTROLLERATE OF INSPECTION (ICV)		SPRING	WEIGHT 0.169	SCALE 1:1
		WIRE II-3.5 ГОСТ 9389-75	SHT 165	SHTS

700-38-1680

Total number of coils	$14.5^{\pm 0.5}$
Number of working turns	12.5
Direction of winding	Arbitrary
Total length of spring	≈ 275

~ Unless otherwise specified.

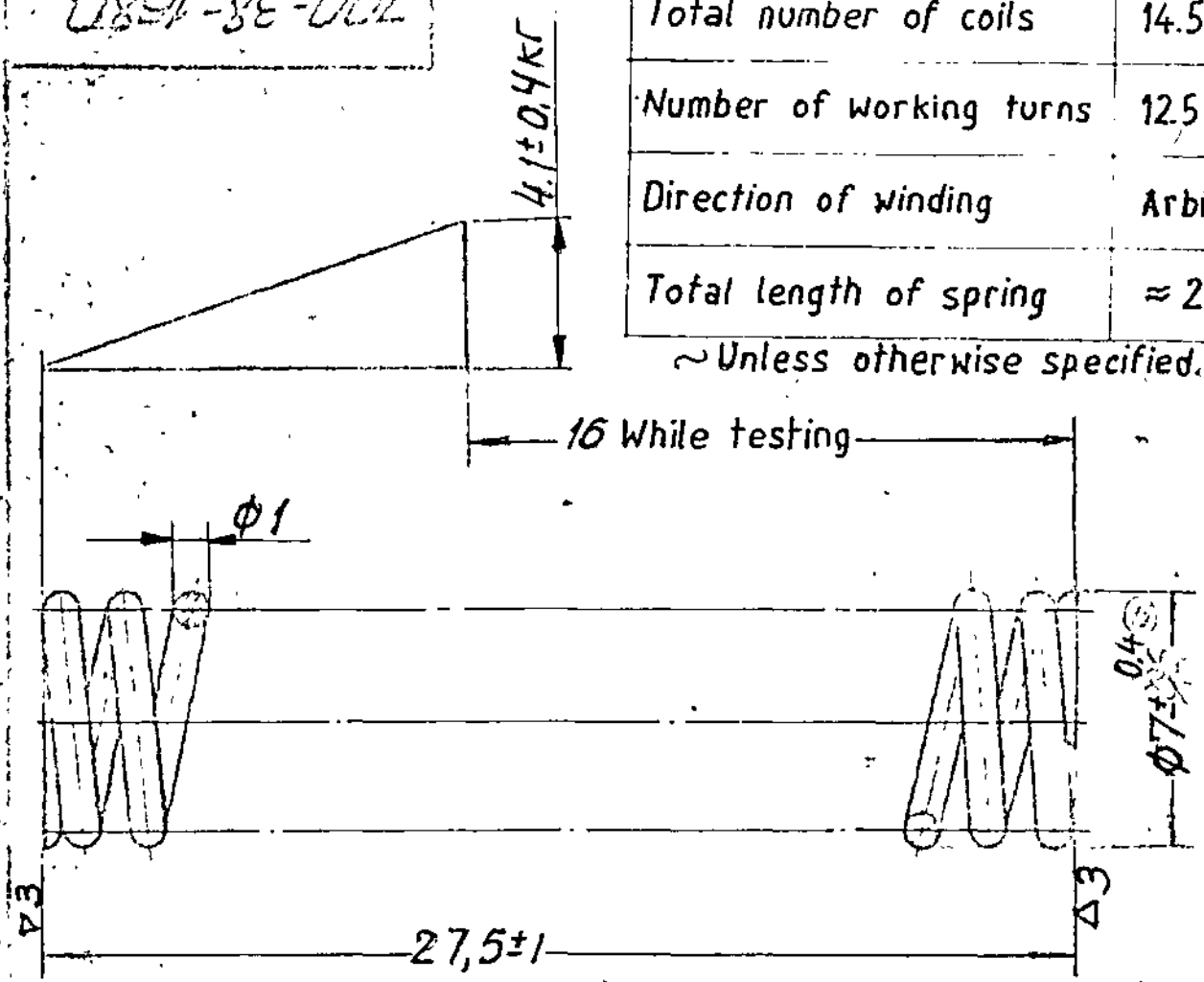

1. Machined surface of butt-ends should be atleast 5/8 of one coil

2. Deviations of generatrix of spring from the line perpendicular towards the butt-ends should not exceed 1mm over the length of spring.

3 Coating. Chemically parkerized, accelerated, chromatized impregnated with oil K-17 GOST 10877-76 as per Instructions 053 25289 00002 or with varnish KO-815 GOST 11066-74

(A) EQ. MATERIAL.- SPRING STEEL Gde 3 To IS:4454-81.

DCO No & DATE	ISSUE	AMENDMENTS
01005 ICV 24 OCT 05	(A)	EQ. MATERIAL ADDED

72/

APPROVED	M V.G.D.	700-38-1680		
CHECKED	B.M.S.REDDY			
CONTROLLERATE OF INSPECTION (ICV)		SPRING	WEIGHT 0.002	SCALE 5:1
			SHT	SHTS
		WIRE II-1 ГОСТ 9389-75	160	70

700-40-260

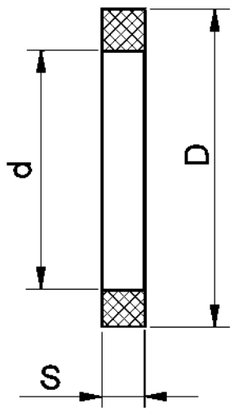

1) OTHER TECHNICAL REQUIREMENTS ARE AS PER TECHNICAL SPECIFICATION TY 81-04-395-75.
2) PART SHOULD CORRESPOND TO APPROVED STANDARD.
DIMENSIONS MM.

DESIGNATION	d NOMINAL	d DEVIATION	D NOMINAL	D DEVIATION	S NOMINAL	S DEVIATION	MASS kg	D S CAT PART No.
-23	42	+0.7	52	1.0	2.0	±0.20	0.0018	
-24	45		55				0.0018	
-25	45		66				0.0044	
-26	50		56				0.0012	
-27	50		60				0.0020	
-28	52	+1.0	62				0.0021	
-29	66		72				0.003	
-30	68		78				0.0027	
-31	76		85				0.0027	
-32	95		125				0.012	

(A) EQ. MATERIAL:- VULCANIZED FIBRE SHEET AS PER IS:4820-68
(B) FOR SHEET THICKNESS ABOVE 1.5 mm.
(C) IS.4819-68 FOR THICKNESS UP TO 1.4 mm

DESIGNATION	d NOMINAL	d DEVIATION	D NOMINAL	D DEVIATION	S NOMINAL	S DEVIATION	MASS kg	D S CAT PART No.
700-40-260	3	+0.5	15	0.6	1.5	±0.15	0.0003	
-01	5		10	0.5			0.0002	
-02	5		12	-0.6			0.0002	
-03	5		15				0.0002	
-04	6		12				0.0002	
-05	8		14				0.0002	LV2/RCV-5330-014023
-06	10		16				0.0002	" -5330-014024
-07	12	+0.6	18				0.0002	" -5330-014025
-08	13		22				0.0004	" -5330-014026
(B) -09	14		24				0.0005	" -5330-014027
(B) -10	16		22				0.0003	" -5330-014028
-11	16		27				0.0007	" -5330-014029
(B) -12	18		26				0.0005	" -5330-014030
(B) -13	20		25		2.0	±0.20	0.0004	" -5330-014031
(B) -14	20		30				0.0009	
-15	22		32	0.7			0.0010	
-16	24		32				0.0003	
(B) -17	27		35				0.0009	
-18	30		36				0.0007	
-19	30		40	0.7			0.0013	
(B) -20	33	+0.7	45				0.0017	
-21	37		46				0.0014	
-22	40		48				0.0013	

DC(I)No. & DATE	ISSUE	AMENDMENTS
00867 NG-2001	(C)	IS:4819-68 WAS IS:419-68
00820-ICV 17-10-2000	(B)	SHEET THICKNESS ABOVE 1.5 mm FOR IS:4820-68 & IS:419-68 FOR THICKNESS UP TO 1.4 mm
00770-ICV 4-4-2000	(A)	EQ. MATERIAL ADDED
00605-ICV 21-4-97		DRAWING REVISED AND RETRACED. (2/97 N OF A)

COMPRESSED ASBESTOS FIBRE GDE. 0/1 TO IS:2712.

NEAREST EQ. MATERIAL
FIBRE BOARD GDE. KT ϕ (A) GOST 14613-69.

ORGL MATERIAL:-

ALL SHARF EDGES & CORNERS TO BE ROUNDED OFF

DRG. NOT TO BE SCALED

ALL THREADS TO CONFORM TO SPECIFICATION

TOLERANCE ON DIMENSIONS UNLESS OTHERWISE SPECIFIED

STAMP OR ETCH, PART No. MANUFACTURER's NAME & YEAR OF MFR.

USED ON:

SCALE: SEE TABLE
DATE : 17-4-97
DRN. Pathak
TCD.
CHD
APPD
WT :- (Kg) SEE TABLE

700-40-260

GASKET

DS CAT No.

CONTROLLERATE OF QUALITY ASSURANCE
(INFANTRY COMBAT VEHICLES)

A3

700-47-288

161

888-47-001

▽3 Unless otherwise specified

1	16.5.91	
2	25.5.92	
3	25.5.92	
4	25.5.92	
5	25.5.92	
6	25.5.92	
7	25.5.92	
8	25.5.92	
9	25.5.92	
10	25.5.92	
11	25.5.92	
12	25.5.92	
13	25.5.92	
14	25.5.92	
15	25.5.92	
16	25.5.92	
17	25.5.92	
18	25.5.92	
19	25.5.92	
20	25.5.92	
21	25.5.92	
22	25.5.92	
23	25.5.92	
24	25.5.92	
25	25.5.92	
26	25.5.92	
27	25.5.92	
28	25.5.92	
29	25.5.92	
30	25.5.92	
31	25.5.92	
32	25.5.92	
33	25.5.92	
34	25.5.92	
35	25.5.92	
36	25.5.92	
37	25.5.92	
38	25.5.92	
39	25.5.92	
40	25.5.92	
41	25.5.92	
42	25.5.92	
43	25.5.92	
44	25.5.92	
45	25.5.92	
46	25.5.92	
47	25.5.92	
48	25.5.92	
49	25.5.92	
50	25.5.92	
51	25.5.92	
52	25.5.92	
53	25.5.92	
54	25.5.92	
55	25.5.92	
56	25.5.92	
57	25.5.92	
58	25.5.92	
59	25.5.92	
60	25.5.92	
61	25.5.92	
62	25.5.92	
63	25.5.92	
64	25.5.92	
65	25.5.92	
66	25.5.92	
67	25.5.92	
68	25.5.92	
69	25.5.92	
70	25.5.92	
71	25.5.92	
72	25.5.92	
73	25.5.92	
74	25.5.92	
75	25.5.92	
76	25.5.92	
77	25.5.92	
78	25.5.92	
79	25.5.92	
80	25.5.92	
81	25.5.92	
82	25.5.92	
83	25.5.92	
84	25.5.92	
85	25.5.92	
86	25.5.92	
87	25.5.92	
88	25.5.92	
89	25.5.92	
90	25.5.92	
91	25.5.92	
92	25.5.92	
93	25.5.92	
94	25.5.92	
95	25.5.92	
96	25.5.92	
97	25.5.92	
98	25.5.92	
99	25.5.92	
100	25.5.92	
101	25.5.92	
102	25.5.92	
103	25.5.92	
104	25.5.92	
105	25.5.92	
106	25.5.92	
107	25.5.92	
108	25.5.92	
109	25.5.92	
110	25.5.92	
111	25.5.92	
112	25.5.92	
113	25.5.92	
114	25.5.92	
115	25.5.92	
116	25.5.92	
117	25.5.92	
118	25.5.92	
119	25.5.92	
120	25.5.92	
121	25.5.92	
122	25.5.92	
123	25.5.92	
124	25.5.92	
125	25.5.92	
126	25.5.92	
127	25.5.92	
128	25.5.92	
129	25.5.92	
130	25.5.92	
131	25.5.92	
132	25.5.92	
133	25.5.92	
134	25.5.92	
135	25.5.92	
136	25.5.92	
137	25.5.92	
138	25.5.92	
139	25.5.92	
140	25.5.92	
141	25.5.92	
142	25.5.92	
143	25.5.92	
144	25.5.92	
145	25.5.92	
146	25.5.92	
147	25.5.92	
148	25.5.92	
149	25.5.92	
150	25.5.92	
151	25.5.92	
152	25.5.92	
153	25.5.92	
154	25.5.92	
155	25.5.92	
156	25.5.92	
157	25.5.92	
158	25.5.92	
159	25.5.92	
160	25.5.92	
161	25.5.92	
162	25.5.92	
163	25.5.92	
164	25.5.92	
165	25.5.92	
166	25.5.92	
167	25.5.92	
168	25.5.92	
169	25.5.92	
170	25.5.92	
171	25.5.92	
172	25.5.92	
173	25.5.92	
174	25.5.92	
175	25.5.92	
176	25.5.92	
177	25.5.92	
178	25.5.92	
179	25.5.92	
180	25.5.92	
181	25.5.92	
182	25.5.92	
183	25.5.92	
184	25.5.92	
185	25.5.92	
186	25.5.92	
187	25.5.92	
188	25.5.92	
189	25.5.92	
190	25.5.92	
191	25.5.92	
192	25.5.92	
193	25.5.92	
194	25.5.92	
195	25.5.92	
196	25.5.92	
197	25.5.92	
198	25.5.92	
199	25.5.92	
200	25.5.92	
201	25.5.92	
202	25.5.92	
203	25.5.92	
204	25.5.92	
205	25.5.92	
206	25.5.92	
207	25.5.92	
208	25.5.92	
209	25.5.92	
210	25.5.92	
211	25.5.92	
212	25.5.92	
213	25.5.92	
214	25.5.92	
215	25.5.92	
216	25.5.92	
217	25.5.92	
218	25.5.92	
219	25.5.92	
220	25.5.92	
221	25.5.92	
222	25.5.92	
223	25.5.92	
224	25.5.92	
225	25.5.92	
226	25.5.92	
227	25.5.92	
228	25.5.92	
229	25.5.92	
230	25.5.92	
231	25.5.92	
232	25.5.92	
233	25.5.92	
234	25.5.92	
235	25.5.92	
236	25.5.92	
237	25.5.92	
238	25.5.92	
239	25.5.92	
240	25.5.92	
241	25.5.92	
242	25.5.92	
243	25.5.92	
244	25.5.92	
245	25.5.92	
246	25.5.92	
247	25.5.92	
248	25.5.92	
249	25.5.92	
250	25.5.92	
251	25.5.92	
252	25.5.92	
253	25.5.92	
254	25.5.92	
255	25.5.92	
256	25.5.92	
257	25.5.92	
258	25.5.92	
259	25.5.92	
260	25.5.92	
261	25.5.92	
262	25.5.92	
263	25.5.92	
264	25.5.92	
265	25.5.92	
266	25.5.92	
267	25.5.92	
268	25.5.92	
269	25.5.92	
270	25.5.92	
271	25.5.92	
272	25.5.92	
273	25.5.92	
274	25.5.92	
275	25.5.92	
276	25.5.92	
277	25.5.92	
278	25.5.92	
279	25.5.92	
280	25.5.92	
281	25.5.92	
282	25.5.92	
283	25.5.92	
284	25.5.92	
285	25.5.92	
286	25.5.92	
287	25.5.92	
288	25.5.92	
289	25.5.92	
290	25.5.92	
291	25.5.92	
292	25.5.92	
293	25.5.92	
294	25.5.92	
295	25.5.92	
296	25.5.92	
297	25.5.92	
298	25.5.92	
299	25.5.92	
300	25.5.92	
301	25.5.92	
302	25.5.92	
303	25.5.92	
304	25.5.92	
305	25.5.92	
306	25.5.92	
307	25.5.92	
308	25.5.92	
309	25.5.92	
310	25.5.92	
311	25.5.92	
312	25.5.92	
313	25.5.92	
314	25.5.92	
315	25.5.92	
316	25.5.92	
317	25.5.92	
318	25.5.92	
319	25.5.92	
320	25.5.92	
321	25.5.92	
322	25.5.92	
323	25.5.92	
324	25.5.92	
325	25.5.92	
326	25.5.92	
327	25.5.92	
328	25.5.92	
329	25.5.92	
330	25.5.92	
331	25.5.92	
332	25.5.92	
333	25.5.92	
334	25.5.92	
335	25.5.92	
336	25.5.92	
337	25.5.92	
338	25.5.92	
339	25.5.92	
340	25.5.92	
341	25.5.92	
342	25.5.92	
343	25.5.92	
344	25.5.92	
345	25.5.92	
346	25.5.92	
347	25.5.92	
348	25.5.92	
349	25.5.92	
350	25.5.92	
351	25.5.92	
352	25.5.92	
353	25.5.92	
354	25.5.92	
355	25.5.92	
356	25.5.92	
357	25.5.92	
358	25.5.92	
359	25.5.92	
360	25.5.92	
361	25.5.92	
362	25.5.92	
363	25.5.92	
364	25.5.92	
365	25.5.92	
366	25.5.92	
367	25.5.92	
368	25.5.92	
369	25.5.92	
370	25.5.92	
371	25.5.92	
372	25.5.92	
373	25.5.92	
374	25.5.92	
375	25.5.92	
376	25.5.92	
377	25.5.92	
378	25.5.92	
379	25.5.92	
380	25.5.92	
381	25.5.92	
382	25.5.92	
383	25.5.92	
384	25.5.92	
385	25.5.92	
386	25.5.92	
387	25.5.92	
388	25.5.92	
389	25.5.92	
390	25.5.92	
391	25.5.92	
392	25.5.92	
393	25.5.92	
394	25.5.92	
395	25.5.92	
396	25.5.92	
397	25.5.92	
398	25.5.92	
399	25.5.92	
400	25.5.92	
401	25.5.92	
402	25.5.92	
403	25.5.92	
404	25.5.92	
405	25.5.92	
406	25.5.92	
407	25.5.92	
408	25.5.92	
409	25.5.92	
410	25.5.92	
411	25.5.92	
412	25.5.92	
413	25.5.92	
414	25.5.92	
415	25.5.92	
416	25.5.92	
417	25.5.92	
418	25.5.92	
419	25.5.92	
420	25.5.92	
421	25.5.92	
422	25.5.92	
423	25.5.92	
424	25.5.92	
425	25.5.92	
426	25.5.92	
427	25.5.92	
428	25.5.92	
429	25.5.92	
430	25.5.92	
431	25.5.92	
432	25.5.92	
433	25.5.92	
434	25.5.92	
435	25.5.92	
436	25.5.92	
437	25.5.92	
438	25.5.92	
439	25.5.92	
440	25.5.92	
441	25.5.92	
442	25.5.92	
443	25.5.92	
444	25.5.92	
445	25.5.92	
446	25.5.92	
447	25.5.92	
448	25.5.92	
449	25.5.92	
450	25.5.92	
451	25.5.92	
452	25.5.92	
453	25.5.92	
454	25.5.92	
455	25.5.92	
456	25.5.92	
457	25.5.92	
458	25.5.92	
459	25.5.92	
460	25.5.92	
461	25.5.92	
462	25.5.92	
463	25.5.92	
464	25.5.92	
465	25.5.92	
466	25.5.92	
467	25.5.92	
468	25.5.92	
469	25.5.92	
470	25.5.92	
471	25.5.92	
472	25.5.92	
473	25.5.92	
474	25.5.92	
475	25.5.92	
476	25.5.92	
477	25.5.92	
478	25.5.92	
479	25.5.92	
480	25.5.92	
481	25.5.92	
482	25.5.92	
483	25.5.92	
484	25.5.92	
485	25.5.92	
486	25.5.92	
487	25.5.92	
488	25.5.92	
489	25.5.92	
490	25.5.92	
491	25.5.92	
492	25.5.92	
493	25.5.92	
494	25.5.92	
495	25.5.92	
496	25.5.92	
497	25.5.92	
498	25.5.92	
499	25.5.92	
500	25.5.92	
501	25.5.92	
502	25.5.92	
503	25.5.92	
504	25.5.92	
505	25.5.92	
506	25.5.92	
507	25.5.92	
508	25.5.92	
509	25.5.92	
510	25.5.92	
511	25.5.92	
512	25.5.92	
513	25.5.92	
514	25.5.92	
515	25.5.92	
516	25.5.92	
517	25.5.92	
518	25.5.92	
519	25.5.92	
520	25.5.92	
521	25.5.92	
522	25.5.92	
523	25.5.92	
524	25.5.92	
525	25.5.92	
526	25.5.92	
527	25.5.92	
528	25.5.92	
529	25.5.92	
530	25.5.92	
531	25.5.92	
532	25.5.92	
533	25.5.92	
534	25.5.92	
535	25.5.92	
536	25.5.92	
537	25.5.92	
538	25.5.92	
539	25.5.92	
540	25.5.92	
541	25.5.92	
542	25.5.92	
543	25.5.92	
544	25.5.92	
545	25.5.92	
546	25.5.92	
547	25.5.92	
548	25.5.92	
549	25.5.92	
550	25.5.92	
551	25.5.92	
552	25.5.92	
553	25.5.92	
554	25.5.92	
555	25.5.92	
556	25.5.92	
557	25.5.92	
558	25.5.92	
559	25.5.92	
560	25.5.92	
561	25.5.92	
562	25.5.92	
563	25.5.92	
564	25.5.92	
565	25.5.92	
566	25.5.92	
567	25.5.92	
568	25.5.92	
569	25.5.92	
570	25.5.92	
571	25.5.92	
572	25.5.92	
573	25.5.92	
574	25.5.92	
575	25.5.92	
576	25.5.92	
577	25.5.92	
578	25.5.92	
579	25.5.92	
580	25.5.92	
581	25.5.92	
582	25.5.92	
583	25.5.92	
584	25.5.92	
585	25.5.92	
586	25.5.92	
587	25.5.92	
588	25.5.92	
589	25.5.92	
590	25.5.92	
591	25.5.92	
592	25.5.92	
593	25.5.92	
594	25.5.92	
595	25.5.92	
596	25.5.92	
597	25.5.92	
598	25.5.92	
599	25.5.92	
600	25.5.92	
601	25.5.92	
602	25.5.92	
603	25.5.92	
604	25.5.92	
605	25.5.92	
606	25.5.92	
607	25.5.92	
608	25.5.92	
609	25.5.92	
610	25.5.92	
611	25.5.92	
612	25.5.92	
613	25.5.92	
614	25.5.92	
615	25.5.92	
616	25.5.92	
617	25.5.92	
618	25.5.92	
619	25.5.92	
620	25.5.92	
621	25.5.92	
622	25.5.92	
623	25.5.92	
624	25.5.92	
625	25.5.92	
626	25.5.92	
627	25.5.92	
628	25.5.92	
629	25.5.92	
630	25.5.92	
631	25.5.92	
632	25.5.92	
633	25.5.92	
634	25.5.92	
635	25.5.92	
636	25.5.92	
637	25.5.92	
638	25.5.92	
639	25.5.92	
640	25.5.92	
641	25.5.92	
642	25.5.92	
643	25.5.92	
644	25.5.92	
645	25.5.92	
646	25.5.92	
647	25.5.92	
648	25.5.92	
649	25.5.92	
650	25.5.92	
651	25.5.92	
652	25.5.92	
653	25.5.92	
654	25.5.92	
655	25.5.92	
656	25.5.92	
657	25.5.92	
658	25.5.92	
659	25.5.92	
660	25.5.92	
661	25.5.92	
662	25.5.92	
663	25.5.92	
664	25.5.92	
665	25.5.92	
666	25.5.92	
667	25.5.92	
668	25.5.92	
669	25.5.92	
670	25.5.92	
671	25.5.92	
672	25.5.92	
673	25.5.92	
674	25.5.92	
675	25.5.92	
676	25.5.92	
677	25.5.92	
678	25.5.92	
679	25.5.92	
680	25.5.92	
681	25.5.92	
682	25.5.92	
683	25.5.92	
684	25.5.92	
685	25.5.92	
686	25.5.92	
687	25.5.92	
688	25.5.92	
689	25.5.92	
690	25.5.92	
691	25.5.92	
692	25.5.92	
693	25.5.92	
694	25.5.92	
695	25.5.92	
696	25.5.92	
697	25.5.92	
698	25.5.92	
699	25.5.92	
700	25.5.92	
701	25.5.92	
702	25.5.92	
703	25.5.92	
704	25.5.92	
705	25.5.92	
706	25.5.92	
707	25.5.92	
708	25.5.92	
709	25.5.92	
710	25.5.92	
711	25.5.92	
712	25.5.92	
713	25.5.92	
714	25.5.92	
715	25.5.92	
716	25.5.92	
717	25.5.92	
718	25.5.92	
719	25.5.92	
720	25.5.92	
721	25.5.92	
722	25.5.92	
723	25.5.92	
724	25.5.92	
725	25.5.92	
726	25.5.92	
727	25.5.92	
728	25.5.92	
729	25.5.92	
730	25.5.92	
731	25.5.92	
732	25.5.92	
733	25.5.92	
734	25.5.92	
735	25.5.92	
736	25.5.92	
737	25.5.92	
738	25.5.92	
739	25.5.92	
740	25.5.92	
741	25.5.92	
742	25.5.92	
743	25.5.92	
744	25.5.92	
745	25.5.92	
746	25.5.92	
747	25.5.92	
748	25.5.92	
749	25.5.92	
750	25.5.92	
751	25.5.92	
752	25.5.92	
753	25.5.92	
754	25.5.92	
755	25.5.92	
756	25.5.92	
757	25.5.92	
758	25.5.92	
759	25.5.92	
760	25.5.92	
761	25.5.92	
762	25.5.92	
763	25.5.92	
764	25.5.92	
765	25.5.92	
766	25.5.92	
767	25.5.92	
768	25.5.92	
769	25.5.92	
770	25.5.92	
771	25.5.92	
772	25.5.92	
773	25.5.92	
774	25.5.92	
775	25.5.92	
776	25.5.92	
777	25.5.92	
778	25.5.92	
779	25.5.92	
780	25.5.92	
781	25.5.92	
782	25.5.92	
783	25.5.92	
784	25.5.92	
785	25.5.92	
786	25.5.92	
787	25.5.92	
788	25.5.92	
789	25.5.92	
790	25.5.92	
791	25.5.92	
792	25.5.92	
793	25.5.92	
794	25.5.92	
795	25.5.92	
796	25.5.92	
797	25.5.92	
798	25.5.92	
799	25.5.92	
800	25.5.92	
801	25.5.92	
802	25.5.92	
803	25.5.92	
804	25.5.92	
805	25.5.92	
806	25.5.92	
807	25.5.92	
808	25.5.92	
809	25.5.92	
810	25.5.92	
811	25.5.92	
812	25.5.92	
813	25.5.92	
814	25.5.92	
815	25.5.92	
816	25.5.92	
817	25.5.92	
818	25.5.92	
819	25.5.92	
820	25.5.92	
821	25.5.92	
822	25.5.92	
823	25.5.92	
824	25.5.92	
825	25.5.92	
826	25.5.92	
827	25.5.92	
828	25.5.92	
829	25.5.92	
830	25.5.92	
831	25.5.92	
832	25.5.92	
833	25.5.92	
834	25.5.92	
835	25.5.92	
836	25.5.92	
837	25.5.92	
838	25.5.92	
839	25.5.92	
840	25.5.92	
841	25.5.92	
842	25.5.92	
843	25.5.92	
844	25.5.92	
845	25.5.92	
846	25.5.92	
847	25.5.92	
848	25.5.92	
849	25.5.92	
850	25.5.92	
851	25.5.92	
852	25.5.92	
853	25.5.92	
854	25.5.92	
855	25.5.92	
856	25.5.92	
857	25.5.92	
858	25.5.92	
859	25.5.92	
860	25.5.92	
861	25.5.92	
862	25.5.92	
863	25.5.92	
864	25.5.92	
865	25.5.92	
866	25.5.92	
867	25.5.92	
868	25.5.92	
869	25.5.92	
870	25.5.92	
871	25.5.92	
872	25.5.92	
873	25.5.92	
874	25.5.92	
875	25.5.92	
876	25.5.92	
877	25.5.92	
878	25.5.92	
879	25.5.92	
880	25.5.92	
881	25.5.92	
882	25.5.92	
883	25.5.92	
884	25.5.92	
885	25.5.92	
886	25.5.92	
887	25.5.92	
888	25.5.92	
889	25.5.92	
890	25.5.92	
891	25.5.92	
892	25.5.92	
893	25.5.92	
894	25.5.92	
895	25.5.92	
896	25.5.92	
897	25.5.92	
898	25.5.92	
899	25.5.92	
900	25.5.92	
901	25.5.92	
902	25.5.92	
903	25.5.92	
904	25.5.92	
905	25.5.92	
906	25.5.92	
907	25.5.92	
908	25.5.92	
909	25.5.92	
910	25.5.92	
911	25.5.92	
912	25.5.92	
913	25.5.92	
914	25.5.92	
915	25.5.92	
916	25.5.92	
917	25.5.92	
918	25.5.92	
919	25.5.92	
920	25.5.92	
921	25.5.92	
922	25.5.92	
923	25.5.92	
924	25.5.92	
925	25.5.92	
926	25.5.92	
927	25.5.92	
928	25.5.92	
929	25.5.92	
930	25.5.92	
931	25.5.92	
932	25.5.92	
933	25.5.92	
934	25.5.92	
935	25.5.92	
936	25.5.92	
937	25.5.92	
938	25.5.92	
939	25.5.92	
940	25.5.92	
941	25.5.92	
942	25.5.92	
943	25.5.92	
944	25.5.92	
945	25.5.92	
946	25.5.92	
947	25.5.92	
948	25.5.92	
949	25.5.92	
950	25.5.92	
951	25.5.92	
952	25.5.92	
953	25.5.92	
954	25.5.92	
955	25.5.92	
956	25.5.92	
957	25.5.92	
958	25.5.92	
959	25.5.92	
960	25.5.92	
961	25.5.92	
962	25.5.92	
963	25.5.92	
964	25.5.92	
965	25.5.92	
966	25.5.92	
967	25.5.92	
968	25.5.92	
969	25.5.92	
970	25.5.92	
971	25.5.92	
972	25.5.92	
973	25.5.92	
974	25.5.92	
975	25.5.92	
976	25.5.92	
977	25.5.92	
978	25.5.92	
979	25.5.92	
980	25.5.92	
981	25.5.92	
982	25.5.92	
983	25.5.92	
984	25.5.92	
985	25.5.92	
986	25.5.92	
987	25.5.92	
988	25.5.92	
989	25.5.92	
990	25.5.92	
991	25.5.92	
992	25.5.92	
993	25.5.92	
994	25.5.92	
995	25.5.92	
996	25.5.92	
997	25.5.92	
998	25.5.92	
999	25.5.92	
1000	25.5.92	

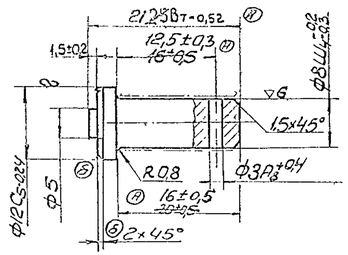

1). Blunt sharp edges.

2). Perform dimensions without deviations as per accuracy class 7, OST 1010.

3). ——————— Cyanide, Cyanidation of other surfaces is allowed, depth is 0.1 to 0.25, HRC ≥48. Check may be performed with a file calibrated to specified hardness.

4). Alternate material is 15Г and 20Г GOST 4543-71.

(A) EQ. MATERIAL:-Gde EN8(080M40) TO BS:970-83 WITH S&P RESTRICT TO 0-035 MAX.

MATERIAL :— BAR 12-5 - GOST 7417-75 / 20 GOST 1051-73		
ALL SHARP EDGES & CORNERS TO BE ROUNDED OFF	ALL THREADS TO CONFORM TO SPECIFICATION	STAMP OR ETCH, PART NO. MANUFACTURERS NAME & YEAR OF MFR.
DRG. NOT TO BE SCALED		
SCALE :- 2 : 1	TOLERANCE ON DIMENSIONS UNLE -SS OTHERWISE SPECIFIED	USED ON:- 672-78-cb 104 / 672-78-cb 105
DATE :- 19-06-95		
DRN.	WT :- (Kg)	SHAFT
TCD.	0.012	
CHD.		700-47-288
APD.		
CONTROLLERATE OF QUALITY ASSURANCE (INFANTRY COMBAT VEHICLES) 161		

700-47-359

▽3 (▽)

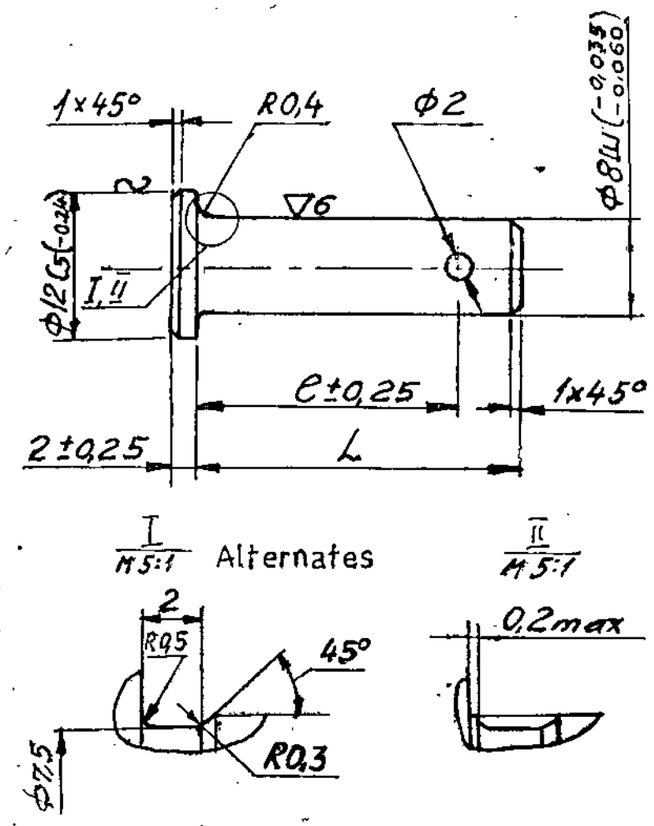

(G) EQ.MATERIAL:- Gde EN19 (709M40) TO BS:970-83 WITH S&P RESTRICT TO 0.035 MAX. (FOR 700-47-359-02)

(E) EQ.MATERIAL:- 709 M40 TO BS:970-83 WITH P-0.025 Max, S-0.015-.040

1. HB 341 to 255 (Ø3,3 to 3,8).
2. Alternate material is 38xC, 38xA, 40X, 40XC, GOST 4543-71
3. Unspecified limit deviations of dimensions are as follows: for holes-as per A_7, and for shafts-as per B_7
4. Displacement of hole from rod axis should not exceed 0,3 mm.
5. Coating: Zinc-plated, 9 microns thick, chromatized. Remove hydrogen embrittlement. Do not check coating in hole.

(A) 6. EQ. MATERIAL :- 40 Cr 4 Mo3 TO IS:5517.

(C) EQ.MATERIAL:- 40 Cr 1 Mo28 TO I.S:4367-67

(D) EQ.MATERIAL: GRADE 42 CrMo4 TO IS:5517-93 FOR 700-47-359-04

DCCD NO DATE	ISSUE	NATURE OF AMENDMENT
00898-ICV 27-8-01	(E)	EQ. MATERIAL ADDED FOR 700-47-359-01.
00791-ICV 30.5.2000	(D)	EQ. MATERIAL ADDED. To 700-47-359-04
00758-ICV 3-2-2000	(C)	EQ.MATERIAL ADDED
00580-ICV 14-8-1996.	(B)	D.S.CAT No. ADDED AGAINST DRG. Nos. 700-47-359-01, -359-02, 359-03 and description added.
00321-ICV Sd/- 11 FEB 92	(A) Sd/-	NOTE FOR EQ. MATERIAL ADDED.

DC (1) No. & DATE	ISSUE	NATURE
01005-ICV 24-11-02	(G)	EQ. MATERIAL ADDED FOR 700-47-359-02
01000-ICV 16/8/05	(F)	DS CAT No ADDED AGAINST DRG. No: 700-47-359 AND DESCRIPTION ADDED

AMENDMENTS

Designation	L, MM	l, MM	Mass kg	D.S.CAT. No.	DESIGNATION.
700-47-359	16±0,43	12,5	0,008	LV2/RCV 5315-010164 (F)	PIN STRAIGHT HEADED (E)
-01	18±0,43	15	0,009	LV2/RCV 5315-006786	PIN, STRIGHT, HEADED.
-02	22±0,52	19	0,010	LV2/RCV 5315-006785	PIN, STRIGHT, HEADED.
-03	26±0,52	22	0,012	LV2/RCV 5315-006784	PIN, STRIGHT, HEADED.
-04	36±0,62	31	0,016		
-05	50±0,62	45	0,021		
-07	55±0,74	50	0,023		

(B)

APPROVED	M VASU	700-47-359		
CHECKED			WEIGHT	SCALE
CONTROLLERATE OF INSPECTION (ICV)		AXLE	SEE TABLE	
			SHT	SHTS
		45x ГОСТ 4543-71	55	181 of 210

700-56-206

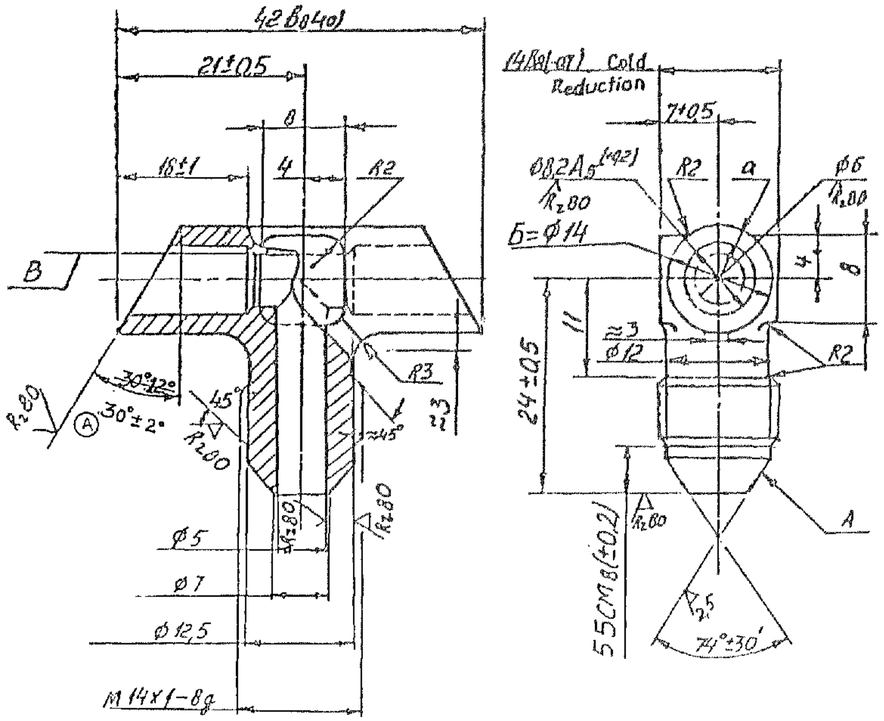

TECHNICAL CONDITIONS

1 Unspecified limit deviations of dimensions of surfaces to be machined are as follows for holes – as per A_7 shafts – as per B_7
Other requirements for forging are as per class II GOST 7505-74

2. Run-out of surface A with respect to the angle diamater of thread should not exceed 0.0105mm (qualified tolerance)
3. Machining may be carried out as per conventional dotted line
4. Local recesses are not more than 0.05mm are allowed on unmachined surfaces.
5. Position of drafts is arbitrary
6. Variation in wall thickness "a" should not exceed 1mm
7. Crumpling of dimension Б upto Ø 14B (-0.7) is allowed
8. Shoulder of not more than 0.5mm, is allowed on surface B.
9. Part may be made from steel 35Л-I GOST 977-75 by investment casting in this case :
   b) Unspecified radii should not exceed R1mm
   c) Pattern drafts should not exceed 1°
   d) Alternate material is steel 30Л-I GOST 977-75
   e) Knock-out traces of not more than 0.4 mm are allowed on square boss
   f) Other requirements are as per GOST 3-4365-79
   g) Displacement of up to 0.3 mm is allowed along the dia parting line

Ⓑ EQ MATERIAL:- EN3A TO BS:970-83 WITH S&P RESTRICT TO 0.040 & 0.035 MAX RESPECTIVELY

DC(I)No. & DATE	ISSUE	AMENDMENTS
01005 ICV 24.06.05	Ⓑ	EQ. MATERIAL ADDED
00546 - ICV 26-2-96	Ⓐ	DIMENSION WAS 30°12"

NEAREST EQ. MATERIAL: STEEL 20 GOST 1050-74		
ORGL MATERIAL:-		
ALL SHARF EDGES & CORNERS TO BE ROUNDED OFF	ALL THREADS TO CONFORM TO SPECIFICATION	STAMP OR ETCH, PART No. MANUFACTURER's NAME & YEAR OF MFR.
DRG. NOT TO BE SCALED		
SCALE: 2:1	TOLERANCE ON DIMENSIONS UNLESS OTHERWISE SPECIFIED	USED ON: 675-04-Sb111
DATE : 22-02-1991		
DRN. / TCD.	WT :- (Kg) 0.06	T-PIECE
CHD / APPD	700-56-206	DS CAT No.

CONTROLLERATE OF QUALITY ASSURANCE
(INFANTRY COMBAT VEHICLES)

THE ABBRIVIATIONS AND SYMBOLS ARE BASED ON RUSSIAN SPECIFICATIONS

ALL DIMENSIONS IN mm

700-57-403

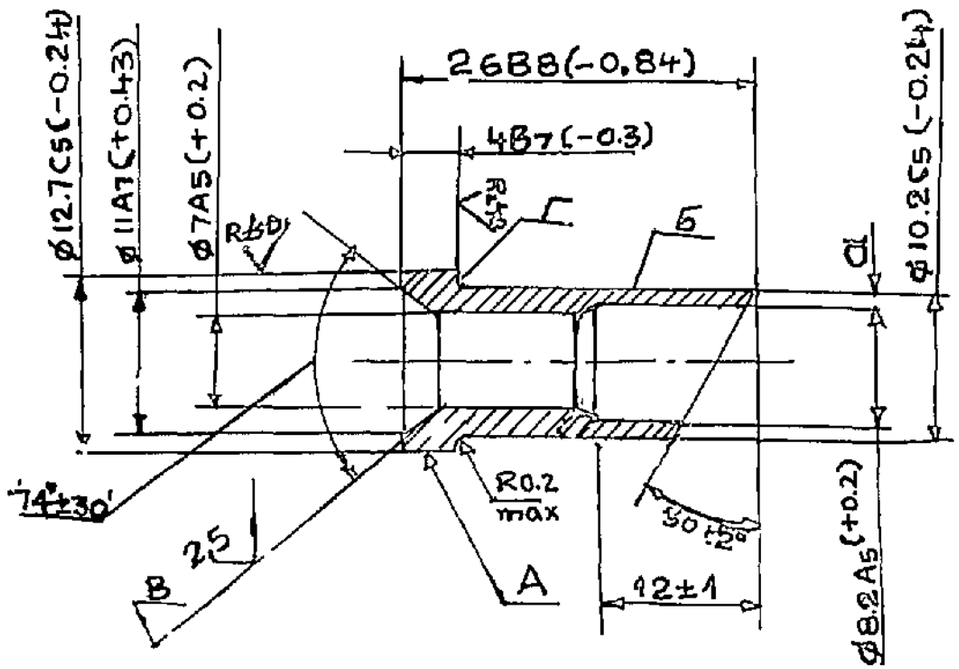

1. ALTERNATE MATERIAL IS STEEL 15, 20, 25 GOST 1050 -74 AND 15Г, 20Г GOST 4543 -71.
2. THE FOLLOWING ARE ALLOWED WITH RESPECT TO SURFACES A AND Б MACHINED FROM ONE SETTING.
   a). RADIAL RUN - OUT OF SURFACE B SHOULD NOT EXCEED 0 15 mm. (QUALIFIED TOLERANCE)
   b). END - PLAY OF SURFACE 'Г' SHOULD NOT EXCEED 0.06 mm
3. DIFFERENCE IN MEASUREMENTS OF DIMENS ON 'a' SHOULD NOT EXCEED 0.2 mm.

EQ. MATERIAL :- i) STEEL TO IS: 7283-74 (MATERIAL AS PER IS : 226-75)
ii) MATERIAL 10 C4 TO IS: 9550-80 Gr I OR
iii) CLASS I A GRADE 15 C8 TO IS, 2004 - 78 OR
iv) STEEL BAR C10 OR C14 OR C15 Mn 75 OR C20 OR C25 Mn 75 OR C30 TO IS; 2073 - 70. OR
v) STEEL BAR C14 TO IS: 2073 - 70. OR
vi) STEEL BAR C15 Mn 75, C20 TO IS: 2073 - 70. OR
vii) STEEL BAR C25 Mn 75, C30 TO IS: 2073 - 70

NOTE: ALL DIMENSIONS ARE IN 'mm'

		00883-ICV 01-06-2001	DRAWING REVISED AND RETRACED
ORGL MATERIAL:- STEEL 10 GOST 1050-74		DC(I)No. & DATE / ISSUE	AMENDMENTS
ALL SHARF EDGES & CORNERS TO BE ROUNDED OFF	ALL THREADS TO CONFORM TO SPECIFICATION		STAMP OR ETCH, PART No. MANUFACTURER's NAME & YEAR OF MFR.
DRG. NOT TO BE SCALED			
SCALE: 2:1	TOLERANCE ON DIMENSIONS UNLESS OTHERWISE SPECIFIED		USED ON: 765-78-Sb312,765-10-Sb565 765-08-Sb422,765-05-Sb427 675-04-Sb103,675-05-Sb136 675-10-Sb106
DATE : 01-06-2001			
DRN. / TCD.	WT :- (Kg) 0.007	NIPPLE	
CHD / APPD		700-57-403	DS CAT No.

CONTROLLERATE OF QUALITY ASSURANCE (INFANTRY COMBAT VEHICLES)

700-57-404

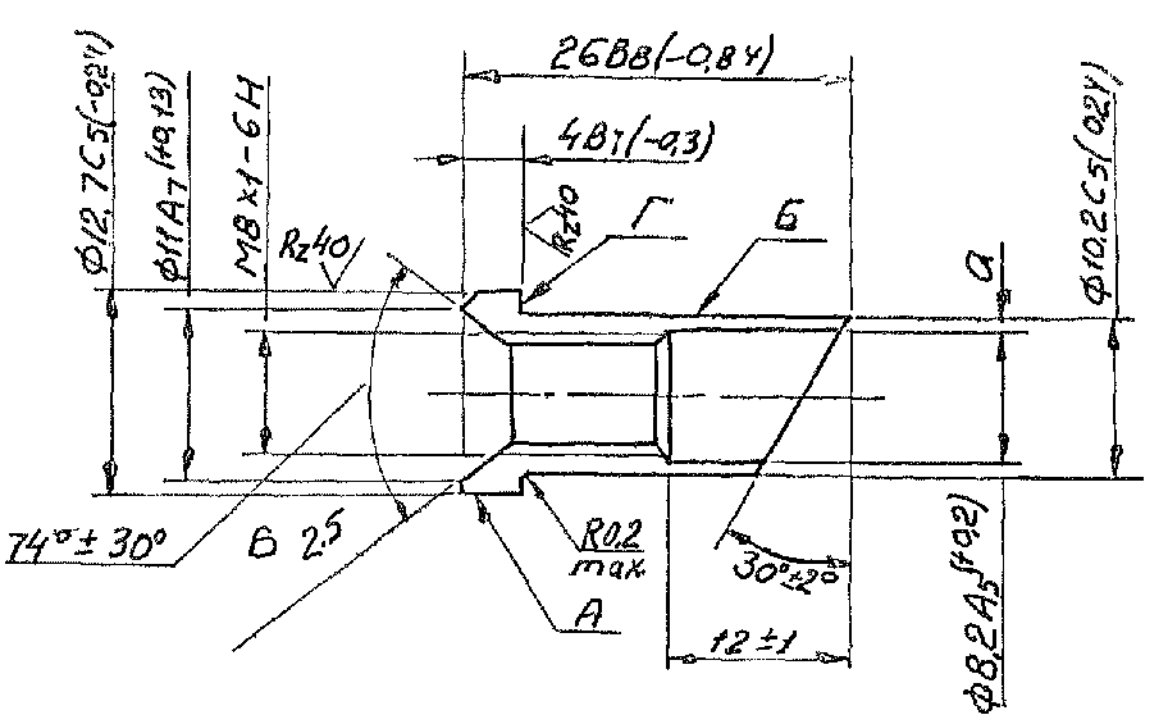

00636-ICV V.Gowda 01-8-98	(A) I STEEL TO IS: 7283-74 (MATERIAL AS PER IS: 226-75) II MAT 10C4 TO IS: 9550-80 Gr I ADOPTED	NATURE	
DC(I) No. DATE	ISSUE	AMENDMENT	

00818-ICV M.V.Rao 10-7-2000	(B)	EQ. MATERIAL ADDED
BGROUND DATE	ISSUE	NATURE OF AMENDMENTS

1. Alternate material is steel 15,20,25 GOST 1050-74 and 15Г,20Г GOST 4543-71.
2. The following are allowed with respect to surfaces A and Б machined from one setting:
a) radial run out of surface B should not exceed 0,15mm.
b) end play of surface Г should not exceed 0,06mm.
3. Difference in measuements of dimension "a" should not exceed 0,2mm.

(A) 4. EQ. MATERIAL: I STEEL TO IS: 7283-74 (MATERIAL AS PER IS: 226-75)
II. MATERIAL 10 C4 to IS: 9550-80 Gr I

(B) EQ MATERIAL :- STEEL BAR C14 TO IS. 2073-70
ALT. MATERIAL :- (i) STEEL BAR C15 Mn75, C20 TO IS: 2073-70
(ii) STEEL BAR C25 Mn75, C30 TO IS: 2073-70.

APPROVED M.V.RAO	700-57-404		
CHECKED H.M.Sheriff		WEIGHT	SCALE
CONTROLLERATE OF QUALITY ASSURANCE (ICV)	NIPPLE	0.007	2:1
		SHT	SHTS
	STEEL 10 GOST 1050-74		

701-119-11

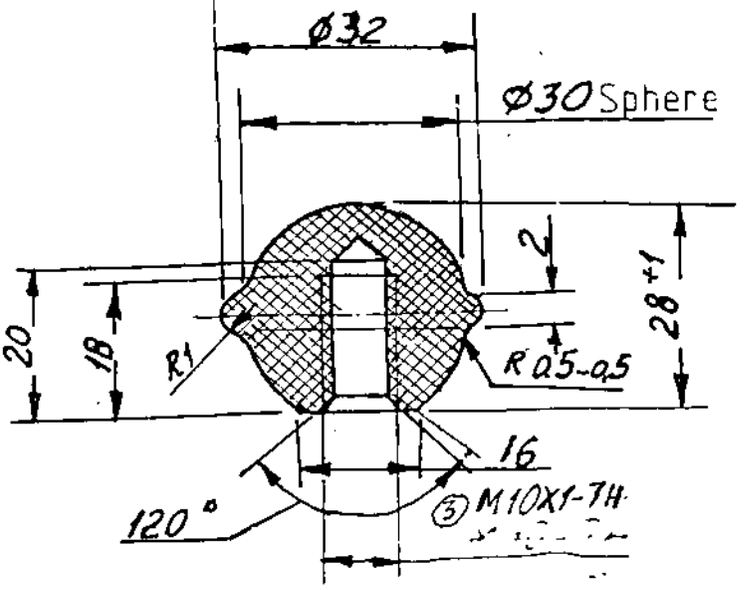

1. Alternate material is phenoplast 04-010-12, black, GOST 5689-79, and ebonite GOST 2748-77.
2. Unspecified limit deviations of dimensions are as follows for holes-as per A7, shafts as per B7, others-as per CM7.
3. Band corners may be rounded off with R0.5mm instead of R1mm.

DEO NO. & DATE	ISSUE	NATURE OF AMENDMENT
00992-ICV 01-03-05	Ⓐ	DS CAT PART NO. ADDED & NOMENCLATURE AMENDED AS 'KNOB'

APPROVED		701-119-11	DS CAT PART NO. Ⓐ LV2/ICV5355-001939
CHECKED		Ⓐ KNOB ~~LEVER HEAD~~	WEIGHT 0.017 / SCALE 1:1
CONTROLLERATE OF INSPECTION (ICV)		Phenoplast 03-010-02 Black ГОСТ 5689-79	SHT / SHTS

USED ON		
765-17-C8192	1	1
" " C8193	1	1

USED ON		
765-17-C8192	1	1
765-17-C8193	1	1

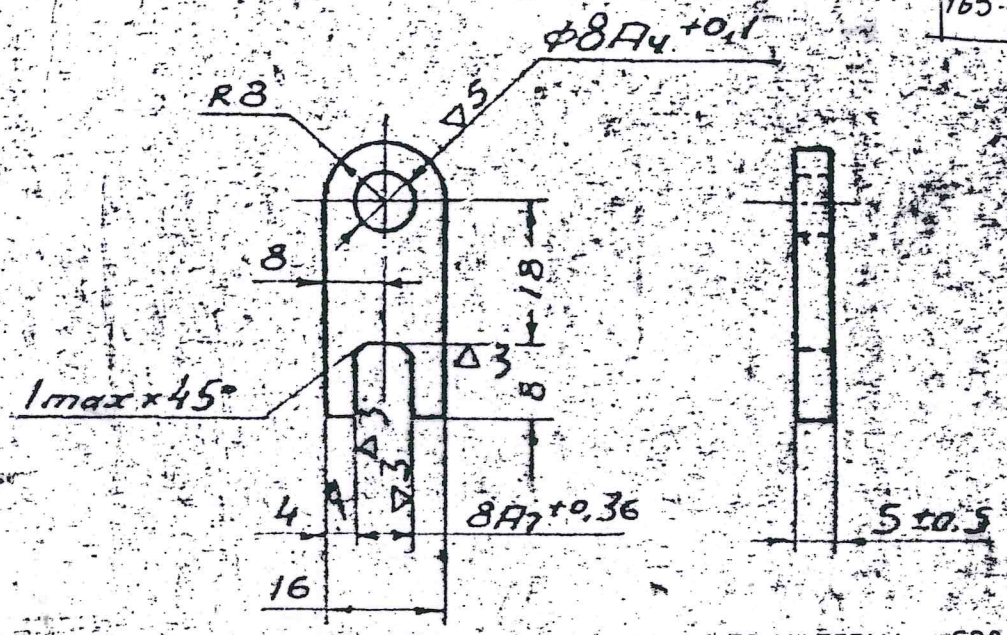

00946-ICV	(B)	EQ. MATERIAL ADDED
13-09-02		
DC(I)No.DT	ISSUE	AMENDMENTS

(A) EQ. MATERIAL:- GRADE Fe410 TO IS:1079-88. (B) EQ.MATERIAL:- C20 IS:1570.

1. Blunt sharp edges.
2. Alternate material is steel CT 3 cn, CT 5 cn, GOST 380-71 and 15, 25, 30, 35 GOST 1050-74.
3. Make dimensions without deviations with accuracy ± 0.5.
4. Stamping draft of not more than 0.4 mm is allowed.

00726-ICV	(A)	EQ. MATERIAL ADDED
10-09-99		
DC(I)No.DT	ISSUE	AMENDMENTS

242

PLEASE SEE OVERLEAF

SKETCH 765-17-247

LUG

WEIGHT	SCALE
0,017	1:1
SHEET	TL. SHTS.

20 GOST 1050-74

765-08-253

V3 Unless stated otherwise

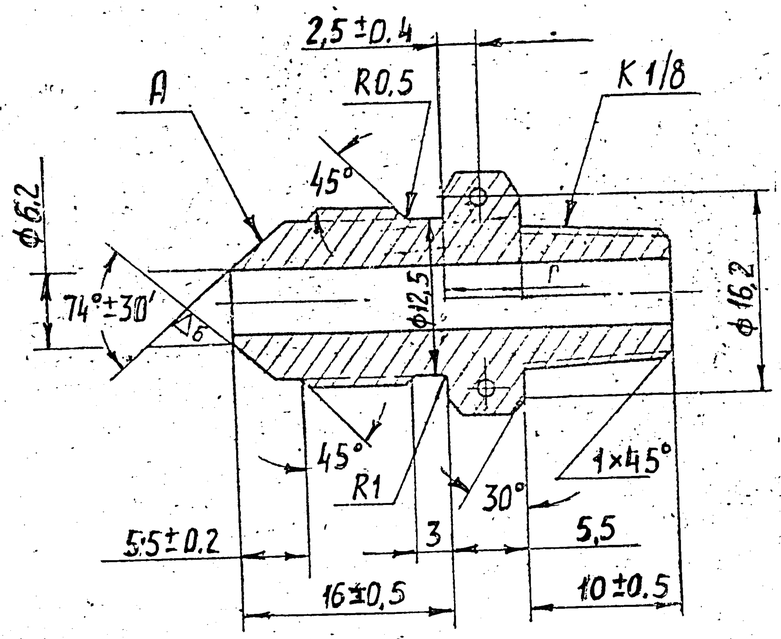

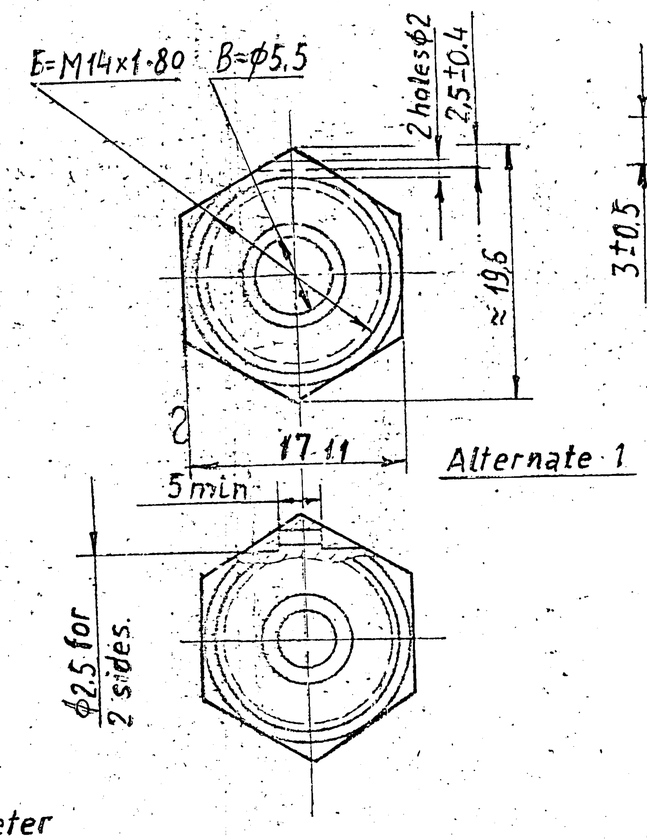

Alternate 1

Alternate 2

Lock punch Clearance at point should not exceed 0.1 mm

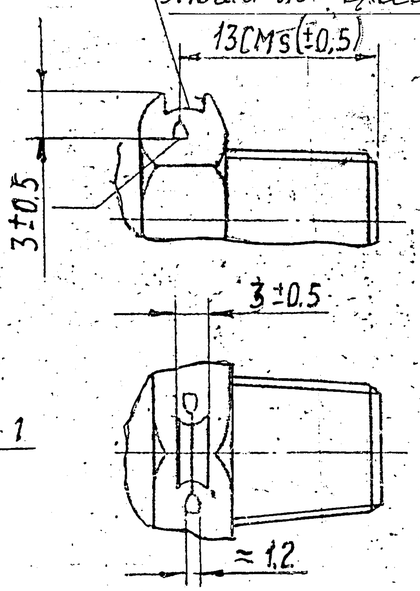

1. Blunt sharp edges.
2. Run out of surface A with respect to angle diameter of thread Б should not exceed 0.05 mm.
3. Perform dimensions without deviations as per accuracy class 7, OST 1010.
4. Coating: Zink-plated, 9 microns thick, chromatized Remove hydrogen embrittlement. Do not check coating on inner surfaces.
5. Misalignment of axes not exceeding 0.5 mm is allowed on section Г when hole B is machined on 2 sides.
6. Rod not less than 1 mm in diameter, should pass through hole Д.

Ⓐ EQ. MATERIAL CLASS4 (45 C8) IS: 2004-78

Ⓑ EQ. MATERIAL:- STEEL BAR Gr 3 TO IS: 9550-80

Ⓒ EQ. MATERIAL:- HEX. BAR C45 TO IS: 2073-70 OR Ⓓ C45 TO IS: 1570.

DC(I) NO. & DATE	ISSUE	NATURE AMENDMENT
01019-ICV 24 APR 06	Ⓔ	DS CAT PART No. ADDED AND DESCRIPTION WAS UNION.
00905-ICV 25-09-01	Ⓓ	EQ. MATERIAL ADDED.
00780-ICV 26.4.2000	Ⓒ	EQ. MATERIAL ADDED
00717-ICV 12-8-99.	Ⓑ	EQ MATERIAL ADDED
00680-ICV 16-02-99	Ⓐ	EQUIVALENT MATERIAL CLASS 4 (45 C8) IS: 2004-78 ADDED IN THE DRAWING

APPROVED	M VASU	DS CAT PART No. LV2/ICVS 4730-007419 Ⓔ	
CHECKED		765-08-253	
CONTROLLERATE OF INSPECTION (ICV)		Ⓔ UNION PIPE	WEIGHT 0.03 / SCALE 2:1
		45 ГОСТ 1050-74	SHT. / SHTS 252 of 368

765-10-1086

148

765-10-1086

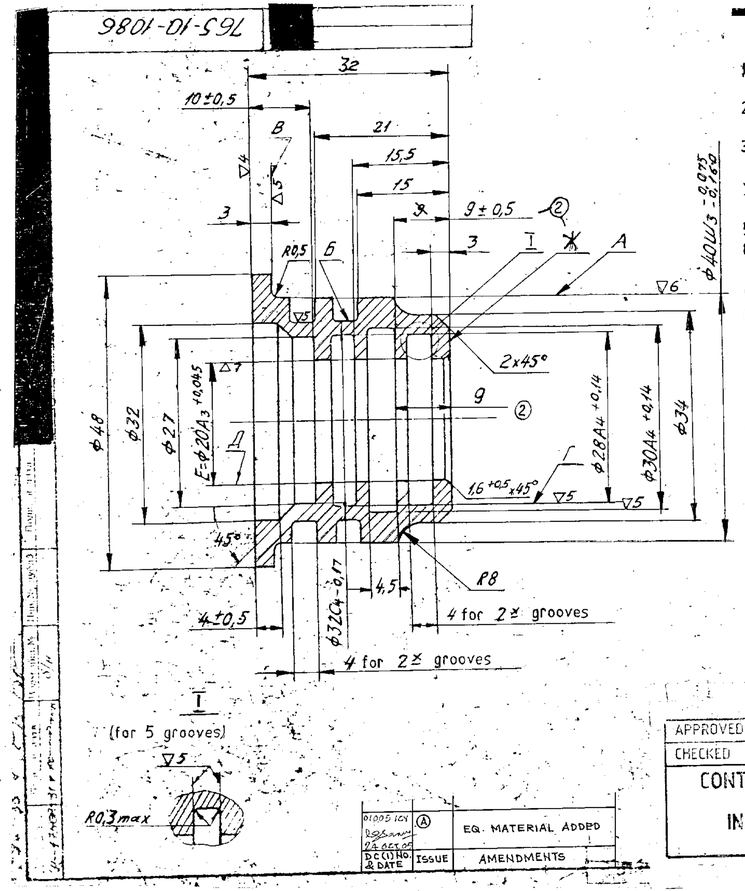

3 unless stated otherwise

1. Perform dimensions without deviations as per accuracy class 7, OST 1010.
2. Run-out surface Б with respect to surface A should not exceed 0.05mm.
3. Run-out of surface B with respect to the axes of surface A should not exceed 0.05mm
7. Run-out of surface Д with respect to the axis of surface A, should not exceed 0.03mm
5. Brinell hardness is 363to285(Ø3.2to3.6) or HRC27to37.
8. Run-out of surface Г with respect to surface Д should not exceed 0.05mm
9. Internal surface may be free of zinc-plating
6. Coating Zinc-plating, 24 microns thick, chromatized Remove hydrogen embrittlement, check dimension E after coating
10. Ovalty of surface Д should not exceed 0.025mm.
4. Alternate material is steel 33xC, 45xC GOST 4543-71, steel 40 GOST 1050-74.
11. Place for checking hardness is surface ⁜ depth of surface dressing should not exceed 0.5mm.

Ⓐ EQ. MATERIAL:- Gde EN19 (709M40) TO BS:970-83 WITH S&P RESTRICTED TO 0·035 MAX.

X16A 77

APPROVED	M.V.Bol	765-10-1086	81/113
CHECKED	H.N.Sh...		
CONTROLLERATE OF INSPECTION (ICV)		HOLDER	WEIGHT 0.14 / SCALE 2:1
		steel 38XC ГОСТ 4543-71	SHT 148 / SHTS 78

DC(1) NO & DATE	ISSUE	AMENDMENTS
01.005 ICV 12.5.85 24.05.85	Ⓐ	EQ. MATERIAL ADDED

765-17-247

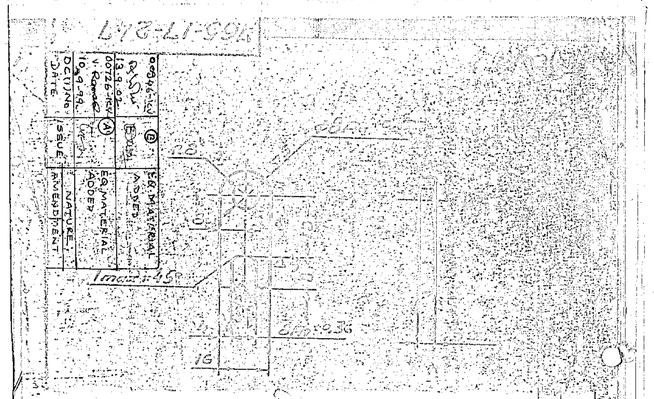

1. Blunt sharp edges.
2. Alternate material is steel CT 3 on, CT 5 on, GOST 300-71 and 15, 25, 30, 35 GOST 1050-74.
3. Make dimensions without deviations with accuracy ± 0.5.
4. Stamping draft of no more than 0.4 mm is allowed.

(A) EQ. MATERIAL:-Gr Fe 410 TO IS: 1079-88

(B) EQ. MATERIAL: C20 IS:1570

D30

APPROVED	H VASU	765-17-247 183/194		
CHECKED	Rathak			
CONTROLLERATE OF INSPECTION (ICV)		LUG	WEIGHT 0·017	SCALE 1:1
			SHT	SHTS
		20 ГОСТ 1050-74		

22

765-78-65

$R_z 40$ (√)

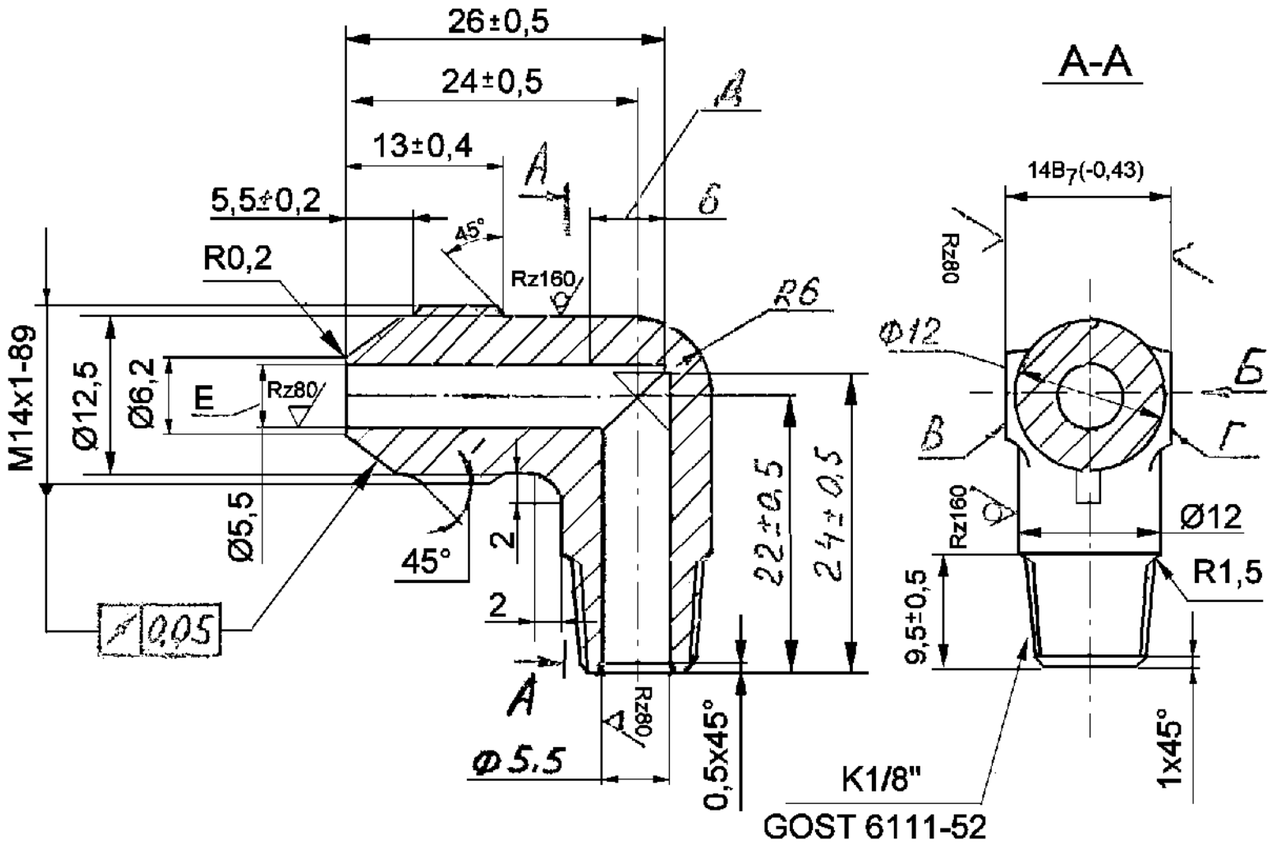

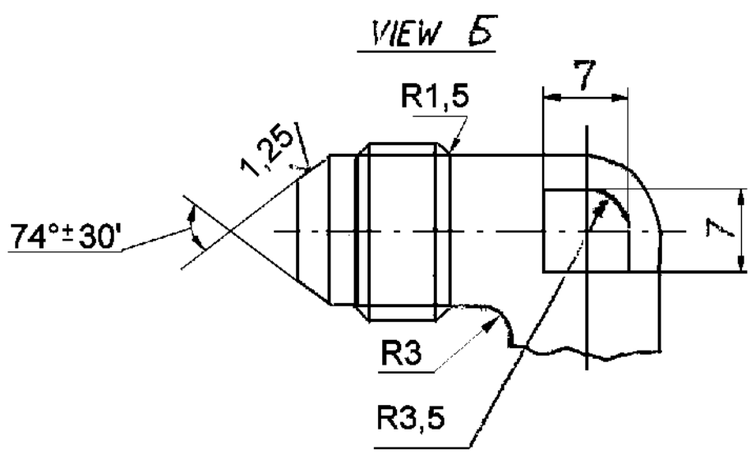

Ⓑ EQ. MATERIAL:- WROUGHT ALLOYED STEEL BILLET/BAR C45, C52 OR 40 C81 TO IS: 5517-69.

1) Unspecified limit deviations of dimensions are as fallows:-
   for holes : as per A_7.
   for shafts : as per B_7.
   others : as per CM_7.
   for angular dimensions } ± 1°

2) Other requiremets placed upon forging are as per class II GOST 7505-74.

3) Coating: Zinc-plated, 9 microns thick, chromatized. Remove Hydrogen embrittlement. Internal surfaces may be free from coating.

4) Surface defects to a depth not exceeding 0.7 mm are allowed on unmachined surfaces.

5) Dents to a depth not exceeding 0.3 mm are allowed on unmachined surfaces B and Г.

6) It is allowed to make the angle as per thickened dash dotted line.

7) Dimension E may be decreased by not more than 0.3 mm above tolerence on dimension A_1

Ⓐ EQ. MATERIAL:- CLASS 4,4SC8 TO IS:2004-78

DC(I)No. & DATE	ISSUE	AMENDMENTS
00837-ICV 4 OCT	Ⓑ	EQ. MATERIAL ADDED.
00651-ICV 29 OCT 98	Ⓐ	CLASS 4,4 SC8 TO IS:2004-78 ADDED AS EQ. MATERIAL

APPROVED	M.VASU	765-78-65		
CHECKED	H.M SLAMA			
CONTROLLERATE OF QUALITY ASSURANCE (ICV)		ANGLE	WEIGHT 0.033	SCALE 2:1
			SHT 1	SHTS 1
		STEEL 45, GOST 1050-74		

A3

765-78-66/67

DRG NUMBER	DS CAT PART No	DESCRIPTION
765-78-66	LV2/ICVS 4730-007426	ADOPTOR ELBOW PIPE
765-78-67		

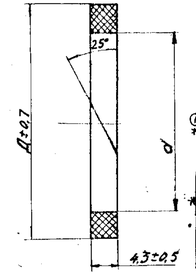

(A) * DS CAT PART No: LV2/ICVS 4730-007426

Designation	A±0.7	d
*765-78-66	39	29±0.2
765-78-67	29	19±0.2

1) For finished part
   a) Volumetric weight should be = $0.37^{+0.02}_{-0.01}$ gm/cm^3

2) Other requirements should be as per GOST 288-72.

3) Cut the oil seals during assembly.

4) Before assembly soak with graphite lubricant. CKa 216-T3 GOST 3333-80 as per instruction 053.25289.00001.

01013-ICV	(A)	DS CAT No ADDED AND DESCRIPTION "ADOPTOR ELBOW PIPE" WAS "OIL SEAL"
19-1-05		
DCN No / DATE	ISSUE	NATURE OF AMENDMENTS

84/11

APPROVED	M. VASU	765-78-66/67	
CHECKED			WEIGHT / SCALE
CONTROLLERATE OF INSPECTION (ICV)		OIL SEAL	0.001 / 2:1
			SHT / SHTS
		FELT TC GOST 288-72	

85 -72-765

▽3 Unless stated otherwise.

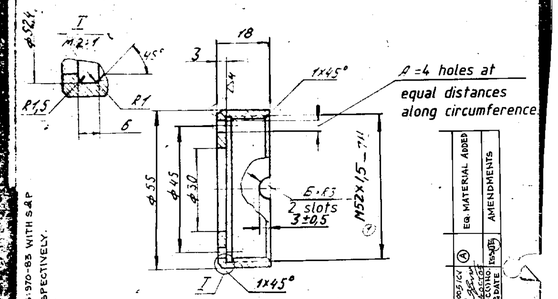

1) Deviation of centres of holes Ø4 from true position should not exceed 0.2 mm.
2) Blunt sharp edges.
3) Perform dimensions specified without deviations as per accuracy Class 7, OCT 1010.
4) Coating: Zinc-plated, 9 microns thick, chromatized. Check dimensions before coating. Remove Hydrogen embrittlement,
5) Alternate material is 35,40,50 GOST 1050-74 and 40 Г GOST 4543-71.
6) Position of slots Б with respect to holes A is arbitrary.

(A) EQ. MATERIAL: - Gde EN8(C60H40) TO BS 970-83 WITH S&P RESTRICT TO 0.040 & 0.055 MAX. RESPECTIVELY.

(A)	EQ. MATERIAL ADDED	
	AMENDMENTS	

APPROVED	M.VASU	765-78-68	
CHECKED			
CONTROLLERATE OF INSPECTION (ICV)	NUT	WEIGHT 0.103	SCALE 1:1
	45 GOST 1050-74	SHT	SHTS

91/113

765-78-69

[redacted]

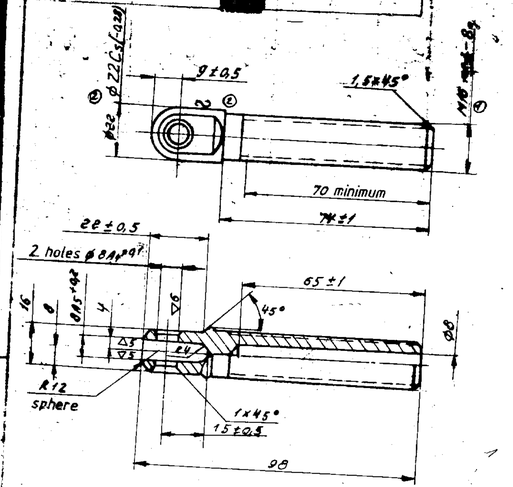

[redacted]

otherwise

1) Blunt sharp edges.

2) Perform dimensions without deviations as per class 7 of accuracy, OST 1010.

3) Coating: Zinc-plated, 9microns thick, oiled. Check the dimensions before coating. Remove Hydrogen embrittlement

4) Alternate material is 40X GOST 4543-71.

5) Brinell hardness should be 302 to 255 (Ø3.5 to 3.8)

6) Do not check coating of inner surfaces.

7) Check the thread with a ring of atleast 45 in length.

8) Thread may be rolled, here diameter of non-threaded portion should be equal to the angle diameter of thread.

Ⓐ EQ. MATERIAL :- Gde EN19 (709M40) (FORGING) TO BS:970-83 WITH S&P RESTRICT TO 0.035 MAX.

X174
24

KVD
65905

85

APPROVED	M.VASU	765-78-69	
CHECKED			
CONTROLLERATE OF INSPECTION (ICV)	FORK	WEIGHT 0.09	SCALE 1:1
	4-5X GOST 4543-71	SHT 1	SHTS 3

DCCNO & DATE	ISSUE	AMENDMENTS
01005/CN 24 OCT 02	Ⓐ	EQ. MATERIAL ADDED

765-78-70-K

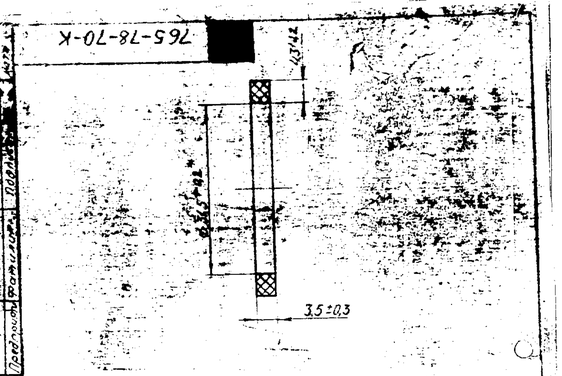

1) *Dimension is provided by tooling.

3) Mark on tag.

4) Other requirements are as per Technical Specifications TY 005216-75 for item, code **253113**

88/11

APPROVED	M.V.950	765-78-70-K	
CHECKED			WEIGHT / SCALE
CONTROLLERATE OF INSPECTION (ICV)		RING	0.002 / 2:1
			SHT / SHTS
		Rubber 4328-1 TY 005216-75	

765-78-71-K1

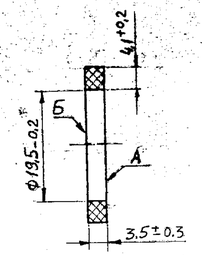

1) *Dimension should be ensured by tool.

2) On the surface A and B, traces of cutting tool in the form of lines of height not more than 0.1 mm are allowed.

3) Mark on the tag.

4) Other requirements should be as per Technical specifications 005216-75 for article of code 253113.

DCO No. & DATE	ISSUE	NATURE OF AMENDMENTS
00968-RCV 23-04-09	A	DS CAT No. LV2/RCV 5330-024891 AND DESCRIPTION PACKING ADDED.

86/11

APPROVED	M. VASU	DS CAT No. LV2/RCV 5330-024891 (A) 765-78-71-K1
CHECKED		
CONTROLLERATE OF INSPECTION (ICV)	~~RING~~ Packing (A)	WEIGHT 0.001 / SCALE 2:1 / SHT / SHTS
	Rubber 4326-1 TY 005216-75	76

765-78-92/93

[redacted]

3 Unless otherwise specified

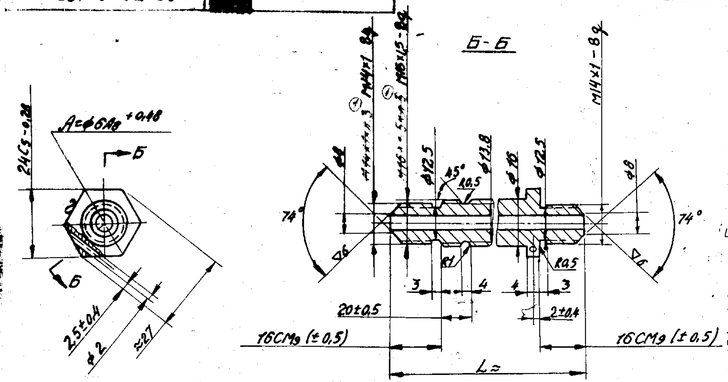

1) Blunt sharp edges.

2) Altenate material is 25,30 35 and 40 GOST 1050-74

3) Perform dimensions *Wihout* deviations as per accuracy class 7, OST 1010.

4) Coating: chemically parkerized, accelarated, chomotised, impregnated with preservative oil K-17, GOST 10877-76 as per instruction 053.25289.00002 or varnish Ko-815 GOST 11066-74. Protect taper surfaces and threads adjacent to them from coating by varnish.

5) Steps within tolerance limits are allowed in hole A.

6) Zink - plating, 9 micron thick, chromotizing are allowed. Remove hydrogen embrittlement.

Ⓐ EQ. MATERIAL:- Gde EN8 (080M40) TO BS:970-83 WITH S & P RESTRICT TO 0.040 & 0.035 MAX. RESPECTIVELY. (FOR 765-78-92.)

Permissible alternate for making.

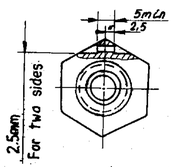

Designation	L	Weight
765-78-92	90	0.158
765-78-93	70	0.12

CODE & DATE	ISSUE	AMENDMENTS
1.8.90	Ⓐ	EQ. MATERIAL ADDED

X 174A
32

APPROVED	M. VASU	765-78-92/93 116 OF 492
CHECKED	D.S. KUMAR	
CONTROLLERATE OF INSPECTION (ICV)	UNION	WEIGHT: SEE TABLE; SCALE: 1:1
	45 GOST 1050-74	SHT / SHTS; 116 OF 154

166 78

765-81-572

▽3 Unless otherwise specified.

007/8	Ⓐ EQ MATERIAL ADDED		
14-2-89			
DC(IN)No DATE	ISSUE	NATURE OF AMENDMENTS	

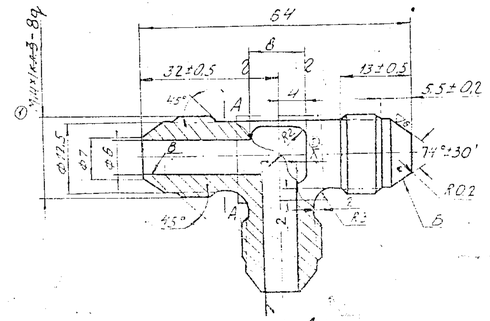

1488-87 To be subjected to cold reduction

A-A

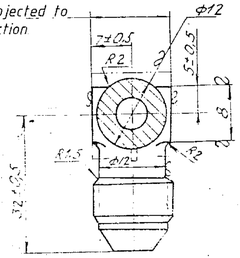

Ⓐ EQ-MATERIAL : 20 C8 Grade 1 To IS: 9550-80

1. Blunt sharp edges.
3. Run-out of surfaces B with respect to angle diameter of thread should not exceed 0,05 mm.
4. Coating: Zinc-plated, 9 microns thick, chromatized. Remove hydrogen embrittlement. Do not check coating on internal surfaces.
5. Machining as per conventional dotted line is allowed.
6. Local depressions of upto 0,5 mm are allowed on unmachined surfaces.
8. Flanges caused by uncut burr are allowed in bends.
2. Provide dimensions without deviations as follows; diameter-as per accuracy class 7, length -as per class 8, OST 1010. Other requirements placed upon forging are as per class II, GOST 7505-74.
7. Non-coincidence of axes of surfaces B and A at point of intersection should not exceed 1,0 mm. Shoulder not exceeding 0,5 mm is allowed on surface B.

NEAREST EQVT MATERIAL			
STEEL 20 GOST 1050-74			
ORGL MATERIAL	DC(IN)No & DATE	ISSUE	AMENDMENTS
ALL SHARP EDGES & CORNERS TO BE ROUNDED OFF.	ALL THREADS TO CONFORM TO SPECIFICATION.		STAMP OR ETCH, PART NO. MANUFACTURER'S NAME & YEAR OF MFR.
DRG. NO1 TO BE SCALED			
SCALE:- 2:1	TOLERANCE ON DIMENSIONS UNLESS OTHERWISE SPECIFIED		USED ON:-
DATE :- 12-10-2K			
DRN. WT :-(Kg) 0.063	765-78-572		
TCD.			
CHD.	T-PIPE		PART NO
APD.			

CONTROLLERATE OF QUALITY ASSURANCE
(INFANTRY COMBAT VEHICLES)

765 - 78 - 573

[redacted]

▽3 Unless otherwise specified.

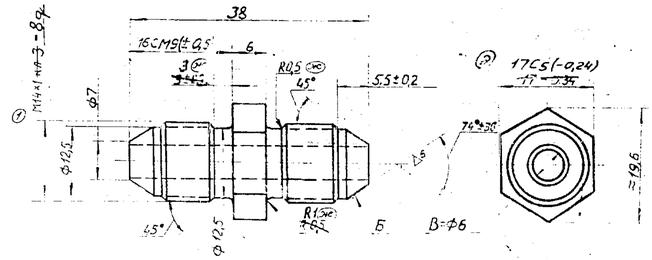

1. Blunt sharp edges.
2. Perform dimensions without deviations of surfaces to be machined as per accuracy class 7, OST 1010.
3. Run-out of surface Б with respect to the angle diameter of thread should not exceed 0,05 mm.
4. Alternate material is steel 20, 25, 30, 35, and 40, ГОСТ 1050-74.
5. Coating: Chemically parkerized, chromatized, impregnated, with preservation oil K-17, ГОСТ 10877-76. as per Instructions 053.25289.00002 or with varnish KO-815 ГОСТ 11066-74. Protect the thread and taper surface from varnish coating.
6. Steps in hole B are allowed within the limits of tolerance.
7. Permissible coating: Zinc - plated, 9 microns thick, chromatized. Remove hydrogen embrittlement.

(A) EQ. MATERIAL :- TYPE 'O' Gde.3, 45 C8 TO IS : 9550-80
(B) EQ. MATERIAL :- STEEL BAR Gr 2 (OR) Gr 3 (OR) Gr 4 TO IS:9550-80
(C) EQ. MATERIAL :- 45 C8 Gde.4 TO IS:9550-80

DCN No. & DATE	ISSUE	NATURE
00719-ICV V. Rama 21-8-99	(C)	EQ. MATERIAL ADDED
00717-ICV 12-8-99	(B)	EQ. MATERIAL ADDED
00612-ICV 25-6-97	(A)	EQ. MATERIAL ADDED. (3/97 N OF A)

AMENDMENTS

APPROVED	M.V. [illegible]	765-78-573 120 OF 492	
CHECKED	H.N. [illegible]		
CONTROLLERATE OF INSPECTION (ICV)	UNION	WEIGHT 0.04	SCALE 2:1
		SHT	SHTS
	45 ГОСТ 1050-74	120 OF 154	

78

765-78-737

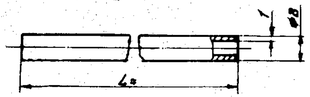

(B) L=1863±5

(B) NOTE:-OFMK WILL PROVIDE SEALED SAMPLE TO THE SUPPLIER FOR GUIDENCE DURING MANUFACTURING OF THE ITEM.

1) Bend and adjust the length as per standard made in situ. Radii of bending should be less than 2 times of outer diameters.

2). Ovality and corrugations at points of bending should not exceed 1 mm

Designation	L=	Weight
765-78-737	~~1630~~	0,282
765-78-738	1210	0,220
765-78-739	1850	0,320
765-78-740	550	0,095
765-78-741	70	0,012
765-78-742	270	0,048
765-78-743	500	0,087
765-78-744	500	0,087
765-78-745	800	0,138
765-78-746	900	0,156
765-78-747	250	0,043
765-78-748	940	0,162
765-78-749	700	0,1[illegible]
765-78-750	200	0,035
765-78-751	1620 (A)	0,288
765-78-752	1615 (A)	0,250
765-78-753	2500	0,432
765-78-754	100	0,017
765-78-755	42	0,007
765-78-756	120	0,021
765-78-757	37	0,006
765-78-758	150	0,025
765-78-759	900	0,156
765-78-760	150	0,025
765-78-761	2160	0,374

765-78-762	1550	0,275
765-78-763	130	0,023
765-78-764	650	0,112
765-78-765	750	0,129

X/74
92/11

00961-ICV	(B)	(1) PIPE LENGTH AMENDED (2) NOTE ADDED.	
95-08-08	(A)	DIMENSION 1620 WAS 1550	
2-03-2000		DIMENSION 1615 WAS 1450	
DE LONG DATE:	ISSUE	NATURE OF AMENDMENT	

APPROVED	M.VIGU	765-78-737/765	
CHECKED		TUBE	WEIGHT: SEE TABLE; SCALE: 1:1
CONTROLLERATE OF INSPECTION (ICV)		PIPE 8x1.5 OA DOCT. 19277-73	SHT: SHTS

765-78-1169

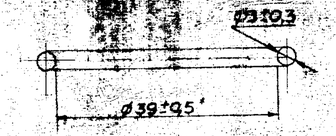

1. *Dimension is provided with tools

2. Mark on tag.

3. Other requirements are as per Technical specifications TY 005216-75 for item. code 253111 H n.

DCN No	ISSUE	NATURE
& DATE		AMENDMENT

93/11

APPROVED	M. VASU	765-78-1169	93/113
CHECKED		RING	WEIGHT 0.0013 / SCALE 2:1
CONTROLLERATE OF INSPECTION (IE V)		Rubber B-14 TY 005216-75	SHT / SHTS

DOCUMENTING DATE		
ISSUE	(B)	EQ. MATERIAL ADDED. 765-78-1257.
NATURE OF AMENDMENTS		

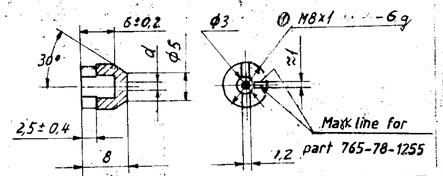

1) Blunt sharp edges.

2) Make mark lines to a depth of approximately 0.5 mm on the butt-end in compliance with table. Arrangement of mark lines with respect to the slot is arbitrary.

3) Provide dimensions without deviations as per accuracy class 7, OST 1010.

4) Displacement of slot with respect to the axis should not exceed 0.4 mm.

5) Alternate material is Sp AK MA -10-3-1.5, GOST 18175-78.

V. Romanov	(A)	EQ. MATERIAL ADDED.
DOCUMENTING DATE	ISSUE	NATURE AMENDMENT

(A) EQ. MATERIAL: Gde 1, HB-CONDITION TO IS: 319-81.
(B) EQ MATERIAL: BRASS BARS OF CU Zn 39 Pb2 TO IS: 531-81.

DESIGNATION	d (A5) Nominal	Deviation	Number of notches
765-78-1254	0.4	+ 0.06	1
765-78-1255	1.5	+ 0.12	2
765-78-1256	2,2	+ 0.12	3
765-78-1257	1	+ 0.12	4
765-78-1258	0.6	+0.06	5

APPROVED		765-78-1254/1258	
CHECKED			
CONTROLLERATE OF INSPECTION (IEV)	JET (Table of drawing)	WEIGHT 0.002	SCALE 2:1
		SHT	SHTS
	JIC 59 1. GOST 15527-70		

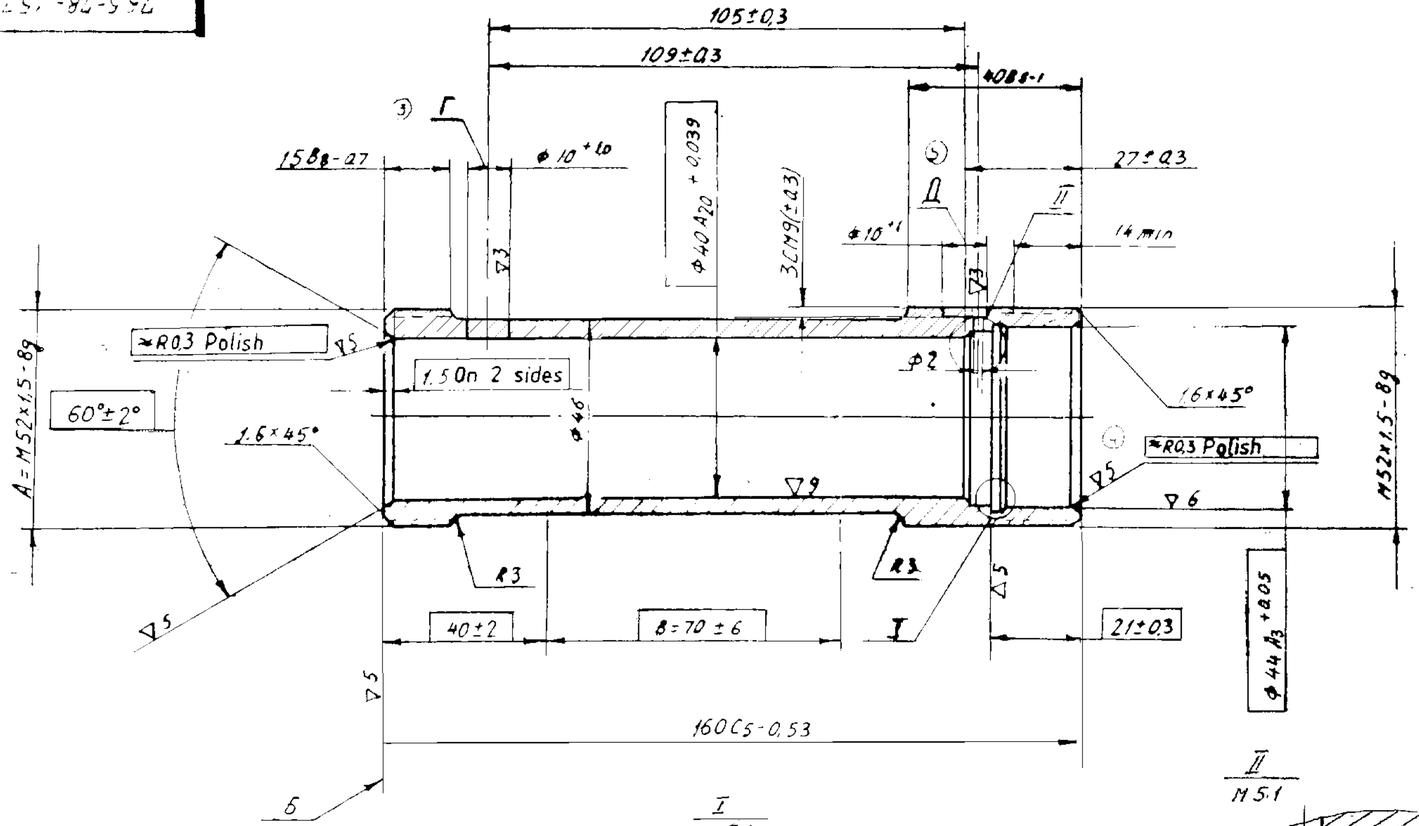

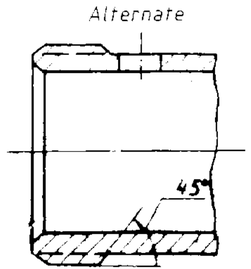

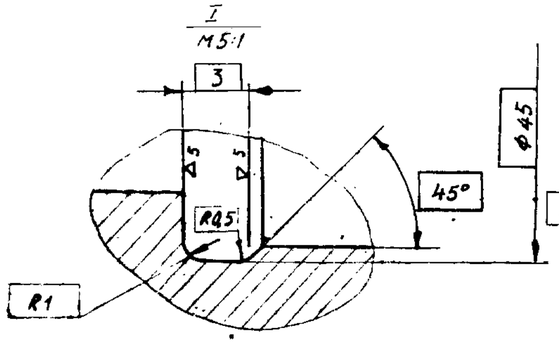

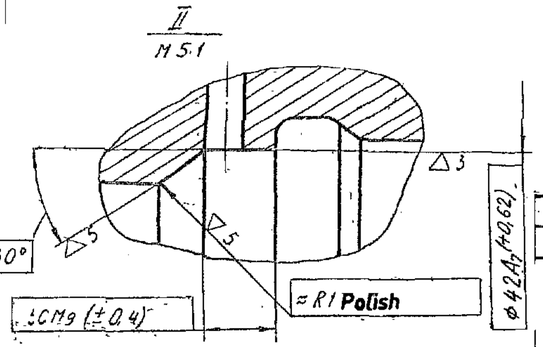

▽3 Unless otherwise specified.

1. Blunt sharp edges.
2. Provide dimensions without deviations as per accuracy class 7, OST 1010.
3. Non-squareness of axis of thread A to surface Б should not exceed 0.1 mm over a length of 50 (Qualified tolerance).
4. Step not exceeding 0.5 mm on section B is allowed.
5. Machine the dimensions and provide surface finish given in [ ] in assembly.
6. Cutting of thread in assembly is allowed.
7. Making of hole for taper thread K1/8" in assembly 765-78-Sb795 is allowed instead of hole Г.
8. Displacement of holes Г and Д along the circumference with respect to one another not exceeding 1 mm is allowed.

Ⓐ EQ. MATERIAL :- Gde EN 36C TO BS : 970-83 WITH S&P RESTRICTED TO 0.025 MAX.

DC(I) No & DATE	ISSUE	AMENDMENTS
01005104 24 OCT 05	Ⓐ	EQ. MATERIAL ADDED

APPROVED		765 - 78 - 1571	
CHECKED		CYLINDER	WEIGHT 0,680 / SCALE 1:1
CONTROLLERATE OF INSPECTION (ICV)		20 × H3A ГОСТ 4543-71	SHT / SHTS 1 / 1

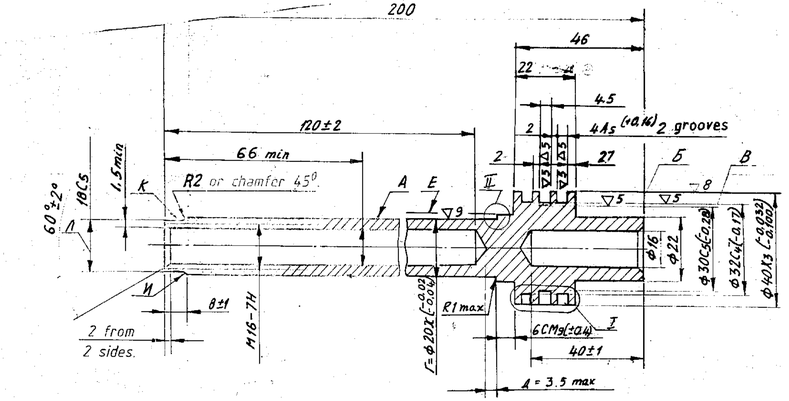

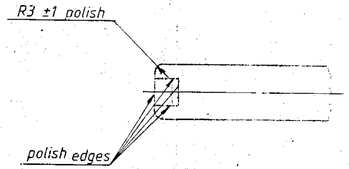

II
Scale 2:1

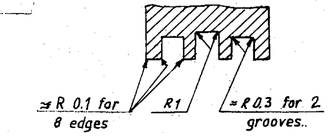

II alternate
Scale 5:1

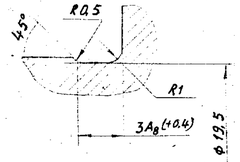

(4) ALTERNATE

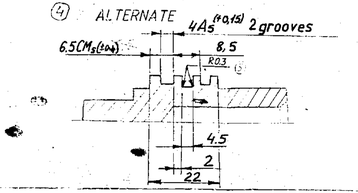

▽3 (▽)

1) HB 341 to 285 (ϕ3.3 to 3.6)

2) Coating of surface A: Chromium plated, 30 to 160 microns thick, hard; for other surfaces ; Chemically oxidized, oiled. Check dimension Г after coating. Protect the thread from chromium plating. Section Д may be free from coating.

3) Unspecified limit deviations of dimensions are as fallows:-
   For holes - as per A_7.
   For shafts - as per B_7.

4) Ovality and taper of surface Б should not exceed 0.02 mm.

5) Radial run-out surfaces Б and B with respect to the axis of surface A should not exceed 0.05 mm.

6) Dark spots are allowed on surface E.

7) Presence of Chromium is allowed on surfaces И and K and dimension Л may be increased by 0.35 mm above tolerence.

(A) EQ. MATERIAL :- Gde EN19 TO BS:970-83 WITH S & P RESTRICT TO 0.035 MAX.

01.05.85	(A)	EQ. MATERIAL ADDED
DRAWN		
CHECKED		
DESIGN & DATE	ISSUE	AMENDMENTS

107/113

APPROVED	M. VASU	765 - 78 - 1606		
CHECKED			WEIGHT	SCALE
CONTROLLERATE OF INSPECTION (I.C.V)		ROD	0,4	1:1
			SHT	SHTS
		45 x ГОСТ 4543-71	1	45

765-78-1722

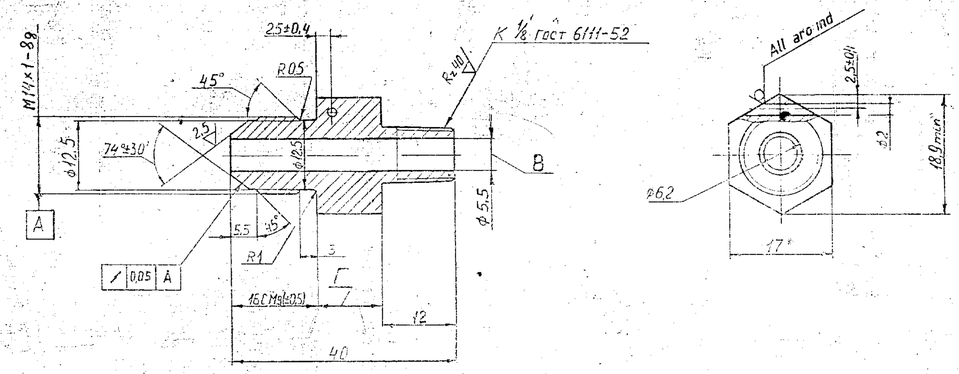

Alternate 1

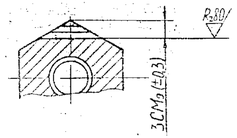

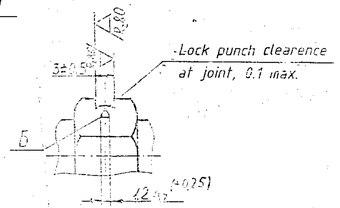

1) Alternate material is steel 20 GOST 1050-74.

2) Unspecified limit deviations of dimensions of holes are as per A_7, shafts - as per B_7, and others - as per CM_8.

3) Rod ø1 mm, minimum should pass through hole Б

4) Misalignment of axes not exceeding 0.5 mm in section Г is allowed as a result of machining of hole B on two sides.

5) Coating: Zinc-plated, 9 microns thick, chromatized. Internal surface need not be coated.

6) * Dimension is given for reference.

(B) EQ. MATERIAL:- Gde EN8 (080M40) TO BS-970-83 WITH S & P RESTRICTED TO 0.040 & 0.035 MAX RESPECTIVELY

DC (CE) No. & DATE	ISSUE	NATURE OF AMENDMENTS
01005 ICV 26 OCT 05	(B)	EQ. MATERIAL ADDED
00351-ICV 15 03 05	(A)	DS CAT No. ADDED AND NOMENCLATURE WAS 'PIPE UNION'

98A/113

APPROVED	K M VASU	(A) 765-78-1722 DS CAT. No. LN2/ICVS 4730-007084	
CHECKED		(A) UNION PIPE ~~PIPE UNION~~	WEIGHT 0.04 / SCALE 2:1
CONTROLLERATE OF INSPECTION (ICV)		HEXAHEDRAL BAR *1 17-5 GOST 8560-78 45-Н-А GOST 1051-73	SHT / SHTS 1 / 1

(78)

765-78-1741

Rz 80 √(√)

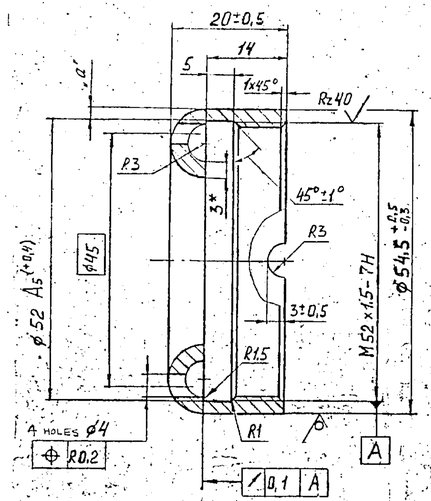

NOTE:-
1. All Dimensions are in mm.
2. The abbreviations and symbols are based on Russian Specifications.

TECHNICAL CONDITIONS

1. UNSPECIFIED LIMIT DIVIATIONS OF DIMENSIONS ARE AS PER IS: 2102.
2. ALTERNATE MATERIAL STEEL 20, GOST 1050-74, STEEL 3 CП GOST 380-71, STEEL BП 25 TY 14-1-1369-75.
3. STAMPING SKEW SHOULD NOT EXCEED 0.3 mm.
4. COATING : ZINC PLATED 9 MICRONS THICK, CHROMOTIZED.
5. * DIMENSIONS IS GIVEN FOR REFERENCE.
6. DIFFERENCE OF MEASUREMENT OF DIMENSION "a" IN DIAMETERICALLY OPPOSITE POINTS SHOULD NOT EXCEED 0.1 mm.

NEAREST EQVT MATERIAL			
SHEET 5-ПУ-0-3 GOST 19903-74. 5-ПП-Т-10 GOST 16523-70.			
ORGL MATERIAL	DC(I) No & DATE	ISSUE	AMENDMENTS
ALL SHARP EDGES & CORNERS TO BE ROUNDED OFF. DRG. NOT TO BE SCALED	ALL THREADS TO CONFORM TO SPECIFICATION.		STAMP OR ETCH, PART NO. MANUFACTURER'S NAME & YEAR OF MFR.
SCALE:- 2 : 1	TOLERANCE ON DIMENSIONS UNLESS OTHERWISE SPECIFIED		USED ON:- 765-78-ск 794 765-10-ск 579
DATE :- 24.12.93			
DRN. WT :-(KG) 0.112	NUT		
TCD.			
CHD.	DRAWING NO 765-78-1741		PART NO
APD.			

CONTROLLERATE OF QUALITY ASSURANCE
(INFANTRY COMBAT VEHICLES)

765-78-65C9-1555

	DESIGNATION	PIPE	LENGTH	WEIGHT
(A)	765-78-CБ 328	765-78-751	162.0	0.339
	765-78-CБ 329	765-78-752	161.5	0.303
	765-78-CБ 330			

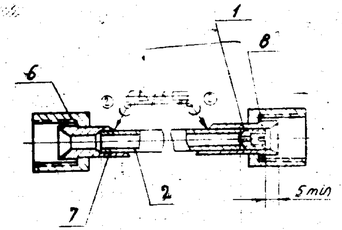

1) Test the pipe for air tightness in water bath under pressure of 90^{+10} Kgf/Cm^2 for one MINUTE. Air Bubbles are not allowed.
2) Other requirements are as per 765-78-101 Technical Requirements

		Enamel ПФ -223 light blue		
		Primer ФЛ -03-к		
		Varnish ГФ -95		
8	700-57-404.	Nipple	1.	
7	700-57-403.	Nipple	1	
6	700-30-241.	UNION nut	2	
5				
4				
3				
(B) 2	As in table	Pipe 8x1-20A ГОСТ 19277-73	1	
1	765-78-1254.	JET	1.	
REF NO	DESIGNATION	[redacted]	QTY	[redacted]

DC(I) No. & DATE	ISSUE	NATURE
09581-ICV 01-3-2001	(B)	DESCRIPTION "8x1-20A ГОСТ 19277-73" ADDED IN Ref No. 2
90555-ICV 23-4-96	(A)	765-78-CБ 328L=162.0 ADDED & 765-78-CБ 329L=161.5 ADDED

AMENDMENTS

MATERIAL [redacted]

DPG. NOT TO BE SEALED
SCALE :- "1" = 1
DATE :- 10-01-1986
DRN. [illegible]
TCD. [illegible]
CHK. [illegible]
APD. [illegible]

WT :- (Kg) SEE TABLE

ALL THREADS TO CONFORM TO SPECIFICATION
TOLERANCE ON DIMENSIONS UNLESS OTHERWISE SPECIFIED

STAMP OR ETCH FULL [illegible] MANUFACTURER [illegible] OF WORK

765-78-CD 2

PIPE

765-78-CБ 328 TO 330

CONTROLLERATE OF QUALITY ASSURANCE
(INFANTRY COMBAT VEHICLES)

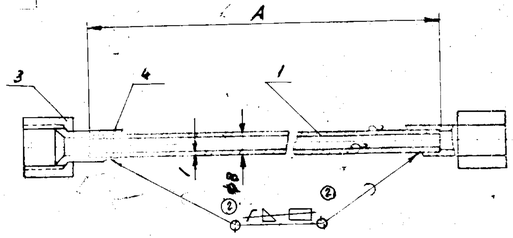

1) Make parts Ref.No 1. from pipe 8x1- 20A, GOST 19277-73.
2) Test the pipe for tightness in water both by feeding air at a pressure of P kgf/cm² for1minute. liberation of air bubbles are not allowed.

3) Other requirements are as per 765-78-101 TT.

	Designation	PIPE Designation	A	Weight	Assembly Weight	P kgf/cm²
	765-78-c5601	765-78-1323	≈1850	0,320	0,374	160+10
(B)	765-78-c5602	765-78-1324	≈~~1450~~ 1420	0,251	0,305	18+5
	765-78-c5603	765-78-1325	≈1850	0,320	0,374	160+10
	765-78-c5604	765-78-1326	≈1250	0,216	0,270	160+10
	765-78-c5605	765-78-1327	≈1150	0,206	0,260	90+10
	765-78-c5606	765-78-1328	≈~~1500~~ 1162	0,260	0,314	160+10
(A)	765-78-c5607	765-78-1329	≈~~1400~~ 1407	0,249	0,303	90+10
	765-78-c5608	765-78-1330	≈~~650~~ 672	0,114	0,168	90+10
	765-78-c5609	765-78-1331	≈500	0,087	0,141	160+10
	765-78-c5610	765-78-1332	≈1625	0,288	0,342	160+10
	765-78-c5611	765-78-1333	≈1675	0,297	0,351	18+5
	765-78-c5612	765-78-1334	≈1625	0,288	0,342	160+10
	765-78-c5613	765-78-1335	≈1675	0,297	0,351	18+5
	765-78-c5614	765-78-1336	≈40	0,007	0,061	160+10
(B)	765-78-c5615	765-78-1337	≈~~240~~ 225	0,035	0,089	90+10
(A)	765-78-c5616	765-78-1338	≈~~189~~ 142	0,032	0,086	90+10
	765-78-c5617	765-78-1339	≈250	0,044	0,098	90+10
	765-78-c5618	765-78-1340	≈1200	0,215	0,269	90+10
	765-78-c5619	765-78-1341	≈125	0,022	0,076	160+10
	765-78-c5620	765-78-1342	≈1040	0,180	0,234	160+10
	765-78-c5621	765-78-1343	≈1440	0,249	0,303	90+10
	765-78-c5622	765-78-1344	≈1170	0,202	0,256	160+10
(B)	765-78-c5623	765-78-1345	≈~~1390~~ 1350	0,240	0,294	18+5
	765-78-c5624	765-78-1523	≈1450	0,250	0,304	18+5
	765-78-c5625	765-78-1524	≈1550	0,268	0,322	18+5

00555-1CV 23-4-96	(B)	765-78-c5602 – LENGTH WAS 1450 765-78-c5615 – LENGTH WAS 200 765-78-c5623 – LENGTH WAS 1390
00519-1CV 4-7-95	(A)	765-78-1328 – LENGTH WAS 1500 765-78-1329 – LENGTH WAS 1400 765-78-1330 – LENGTH WAS 650 765-78-1336 – LENGTH WAS 100
DCN No. & DATE	ISSUE	NATURE

AMENDMENTS

		Enamel ПФ-223		
		Blue		
		Primer ФЛ-03 К		
		Varnish ГФ-95		
4	700-57-403	Nipple	2	
3	700-30-241	Union nut	2	
1	See table	Pipe	1	Without drawing
Ref. No.	Designation	Description	Qty	Remarks

ALL SHARP EDGES & CORNERS TO BE ROUNDED OFF	ALL THREADS TO CONFORM TO SPECIFICATION	STAMP OR ETCH, PART NO. MANUFACTURERS NAME & YEAR OF MAKE
DRG. NOT TO BE SCALED		USED ON:- 675-78-c03
SCALE :- 1 : 1	TOLERANCE ON DIMENSIONS UNLESS OTHERWISE SPECIFIED	
DATE :- 10-01-1996		
DRN. WT :- (Kg) SEE TABLE.	PIPE (DRAWING WITH TABLE)	
TCD.		
CHD.	765-78-c5601/c5625	
APD.		

CONTROLLERATE OF QUALITY ASSURANCE
(INFANTRY COMBAT VEHICLES)

765-78-

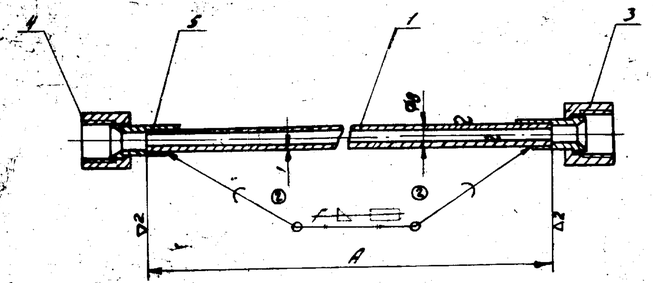

1) Make parts Ref. No. 1, from pipe 8x1 -20A, GOST 19277-73.

2) Test the pipe for tightness in water bath by feeding air at a pressure of 90^{+10} kgf/cm^2 for one minute. Liberation of air bubbles is not allowed.

3) Other requirements are as per 765-78-101.TT

Designation	PIPE Designation	A	Weight	Assy. Weight
765-78-c8626	765-78-1346	≈1100	0.180	0.241
765-78-c8627	765-78-1347	≈1300	0.225	0.282
765-78-c8628	765-78-1348	≈1500	0.260	0.317
765-78-c8629	765-78-1349	≈70	0.012	0.069
765-78-c8630	765-78-1350	≈150	0.026	0.083
765-78-c8631	765-78-1351	≈80	0.014	0.071
765-78-c8632	765-78-1352	≈320	0.055	0.112
Key layout (A) 765-78-c8633	765-78-1475	≈~~1100~~ 812	0.190	0.247
765-78-c8634	765-78-1476	≈800	0.138	0.195

D100

Ref. No.	Designation	Description	Qty	Remarks
		Enamel ПФ-223 Blue		
		Primer ФЛ-03-К		
		Varnish ГФ-95		
5	700-37-403	Nipple	2	
4	700-30-241	Union nut	1	
3	700-30-240	Union nut	1	
2				
1	See table	Pipe	1	Without drawing

00519-ICV 4-7-95	(A) NM	765-78-1475 - LENGTH WAS 1100.
DC (1) No. & DATE	ISSUE	NATURE
AMENDMENTS		

APPROVED	M.VASU	765-78 c8626/c8634	
CHECKED	D.SHANKAR		
CONTROLLERATE OF INSPECTION (ICV)	PIPE	WEIGHT: SEE TABLE	SCALE: 1:1
		SHT	SHTS
			78

765-78-cб648/cб651

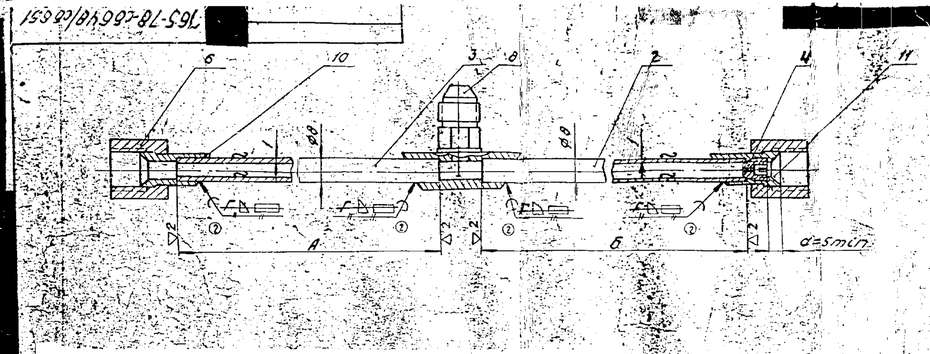

1) Make parts Ref.No. 2. and ref.No. 3 from pipe 1X8-20A, GOST 19277-73.

2) Test the pipe for tightness in water bath by feeding air at a pressure of 90^{+10} kgf/cm^2 for one minute. Liberation of air bubbles are not allowed.

3) Screw the jet in the nipple as far as it goes with providing dimension "a".

4) Other requirements are as per 765-78-101 TT.

DCN No. & DATE	ISSUE	NATURE
00555-ICV 23-7-96	Ⓐ	765-78-cб648 LENGTH WAS 800 ; 765-78-cб649 LENGTH WAS 750

AMENDMENTS

Designation	Ref.No. 3. Designation	A	Weight	Ref.No. 2. Designation	Б	Weight	Assembly Weight.
765-78-cб648	765-78-1362	~~800~~ 710	0,138	765-78-1363	~~120~~ 55	0,02	0,253
765-78-cб649	765-78-1364	~~750~~ 715	0,130	765-78-1365	~~160~~ 55	0,027	0,252
765-78-cб650							
765-78-cб651							

x 17
11-12

Ref No.	Designation	Description	Qty	Remarks
		Enamel ПФ-223		
		Blue		
		Primer ФЛ-03-K		
		Varnish ГФ-95		
11	700-57-404	Nipple	1	
10	700-57-403	Nipple	1	
8	700-56-206	~~T-Joint~~ T-PIECE	1	DCI No 00546-ICV
6	700-30-241	Union nut	2	
4	765-78-1254	Jet	1	
3	See table	Pipe	1	Without drawing
2	See table	Pipe	1	Without drawing

MATERIAL ALL SHARP EDGES & CORNERS TO BE ROUNDED OFF	ALL THREADS TO CONFORM TO SPECIFICATION	STAMP OR ETCH, PART NO. MANUFACTURERS NAME & YEAR OF MFR.
DRG. NOT TO BE SCALED	TOLERANCE ON DIMENSIONS UNLE -SS OTHERWISE SPECIFIED	USED ON:- 675-78-cб2
SCALE :- 1:1		
DATE :- 10-01-1996.		
DRN. Kaur / TCD. Kaur / CHD. Mathak / APD. Tulw	WT :- (Kg) SEE TABLE	PIPE (DRAWING WITH TABLE) 765-78-cб648/cб651

CONTROLLERATE OF QUALITY ASSURANCE
(INFANTRY COMBAT VEHICLES)

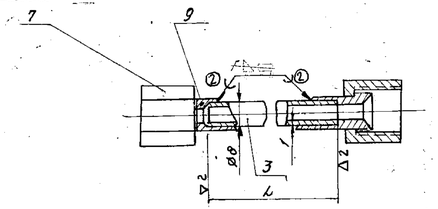

1) Make part Ref. No. 3 from pipe 8x1 - 20A GOST 192 77-73

2) Test the pipe for leakproofness with air in water bath at a pressure of P kg/cm² for one minute. Air bubbles are not allowed

3) On pipes 765-78-cb672 and 765-78-cb673 make compensation loop diameter ≈ 80 along the axis of pipe.

4) Other requirements are as per 765-78-101TT.

	Assemblies		Part. Ref. Nos.		
P kg/cm²	Description	weight	Designation	weight	≈ L
18+5	765-78-cb668	0,198	765-78-1375	0,148	~~860~~ 775
18+5	765-78-cb669	0,202	765-78-1376	0,152	~~880~~ 770
90+10	765-78-cb670	0,258	765-78-1377	0,208	1200
90+10	765-78-cb671	0,285	765-78-1378	0,235	1360
18+5	765-78-cb672	0,180	765-78-1379	0,130	750
18+5	765-78-cb673	0,197	765-78-1380	0,147	850
	765-78-cb674				
90+10	765-78-cb675	0,15.1	765-78-1616	0,101	~~280~~ 392
90+10	765-78-cb676	0,098	765-78-1533	0,044	~~250~~ 852

Ref No	Designation	Description	Qty	Remarks
		Enamel ПФ-223		
		Blue		
		Primer ФЛ-03-K		
		Varnish ГФ-95		
9	700-57-403	Nipple	2	
7	700-30-241	Union nut	2	
3	See table	Pipe	1	without drawing

00555-ICV 23-4-96	B	765-78-cb668-LENGTH WAS 860 765-78-cb669-LENGTH WAS 880
00519-ICV 4-7-95	A	765-78-1616 - LENGTH WAS 280. 765-78-1533 - LENGTH WAS 250.
D C (I) No. & DATE	ISSUE	NATURE

AMENDMENTS

MATERIAL :-

ALL SHARP EDGES & CORNERS TO BE ROUNDED OF

DRG. NOT TO BE SCALED

SCALE :- 1 : 1

DATE :- 10-01-1996

DRN. TCD. CHD APD

WT :- (Kg) SEE TABLE

ALL THREADS TO CONFORM TO SPECIFICATION

TOLERANCE ON DIMENSIONS UNLE -SS OTHERWISE SPECIFIED

STAMP OR ETCH, PART NO. MANUFACTURERS NAME & YEAR OF MFG.

USED ON:- 675-78-cб2

PIPE (TABLE DRAWING)

765-78-cb 668/cb 676

CONTROLLERATE OF QUALITY ASSURANCE
(INFANTRY COMBAT VEHICLES)

765-78-C0712

[redacted]

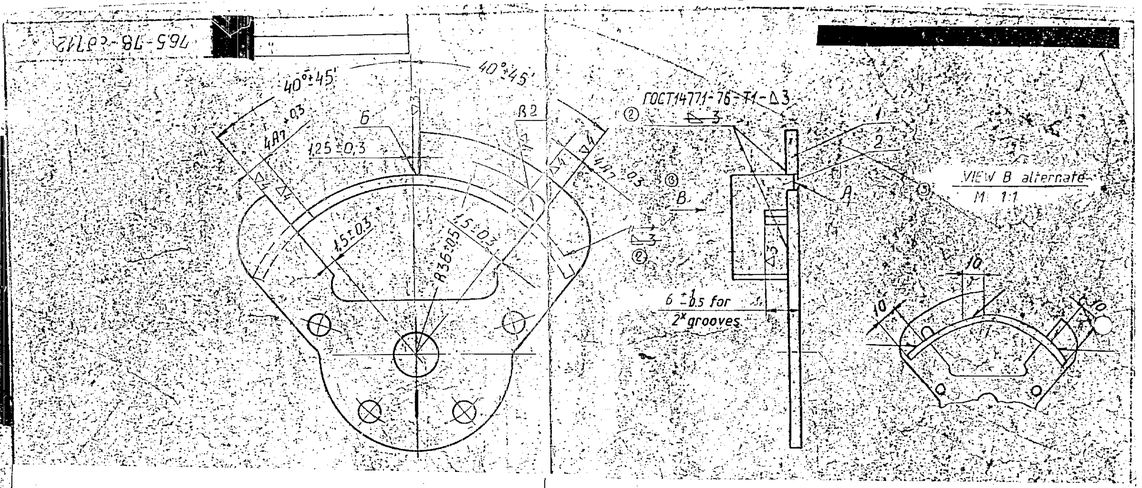

1) Coating: Zinc-plated, 24 microns thick, chromatized. Remove Hydrogen embrittlement.

2) Projection of surface A is not allowed.

3) Welds may be free from coating.

4) Step not exceeding 1.5 mm is allowed on surface Б

5) Cut with max. depth of 0.3 mm in slots, is allowed.

DC(I) No. & DATE	ISSUE	AMENDMENTS
01025-ICV 22.6.06	A	DS CAT No. ADDED & NOMENCLATURE WAS 'RETAINER'.

X174
15

Ref. No.	DESIGNATION	DESCRIPTION	Qty	REMARKS
2	LV2/ICVS 5340-135167 765-78-1447.	~~Step~~ Stopper Special	1	REF. DC(I) 01013-ICV
1	765-78-1446.	Lock	1	

APPROVED: M. YAGU

CHECKED: D. SKUMAR

CONTROLLERATE OF INSPECTION (ICV)

DS CAT No. LV2/ICVS 5340-135148

765-78-C0712

RETAINER AIR LOCK

~~RETAINER~~

WGHT 0.065 SCALE 2:1

SHT SHTS

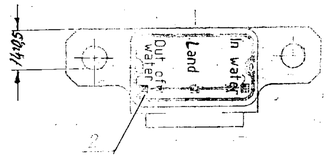

1). Projection of rivets over surface A is not allowed.

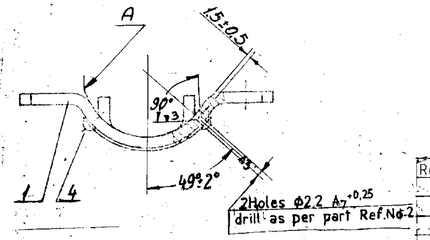

Ref. No	Designation	Description	Qty	Remarks
1	765-78-1448	Clamp	1	
2	~~765-78-0328-005673~~ 765-78-1512	Instruction plate	1	REF. DC(I) 01013-ICV
4	Rivet 2x6-37 GOST10299-80		2	

2E

APPROVED		765-78-C0717
CHECKED	H M Sl [illegible]	
CONTROLLERATE OF INSPECTION (ICV)	(A) ~~CLAMP~~ CLAMP LOOP	WEIGHT 0.041 / SCALE 1:1
	DS CAT PART NO: (A) CGA(CV)/LV2/RCV 5340-010316	SHT SHTS

DC(I) NO DATE	ISSUE	NATURE OF AMENDMENT
00358-ICV 08-11-96	(A)	DS CAT NO ADDED AND DESCRIPTION "CLAMP, LOOP" WAS "CLAMP" C.O.D. CORRECTION

FORMAT	ZONE	REF. NO	DESIGNATION.	DESCRIPTION.	QTY	REMARKS
				TECHNICAL PAPERS		
11			765-78-C6717-K	Assembly drawing		
				PARTS		
12		1	765-78-1448-K	Clamp	1	
		2				
11		3	765-78-1512 LV2 ICV 9905-009673	Instruction plate	1	REF. DCO 01013-ICV
				STANDARD ARTICLS		
		4		Rivet 2x6 37 GOST 10299-80.	2	

291

APPROVED	M.VASU	765-78-CB717-K	
CHECKED	H.M. [illegible]		WEIGHT / SCALE
CONTROLLERATE OF INSPECTION (ICV)		CLAMP	SHT 1 SHTS 2

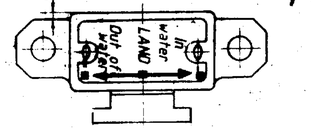

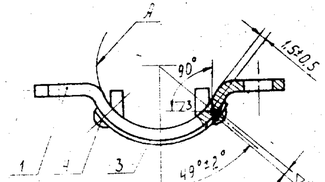

2 holes $\phi 2.2^{+0.05}_{-0.05}$
drill as per part, Ref. No. 3.

1) Projection of rivets beyond surface A is not allowed.

APPROVED	M. [illegible]	765-78-CB 717-K		
CHECKED	A. MS REDDY	CLAMP	WEIGHT	SCALE
CONTROLLERATE OF INSPECTION (ICV)			0.041	1:1
			SHT 2	SHTS 2

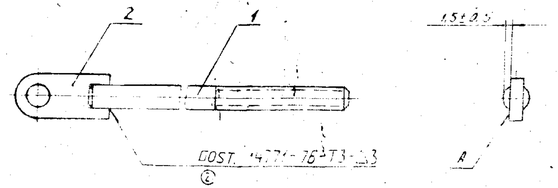

1) Non parallelity of axis of rod and sufaces A should not exceed 0.6 mm over a length of 50.

2) Coating: Zink plated, 9 microns thick, chromatized. Remove hydrogen embrittlement. Check dimensions before coating.

18

KVD 65825

Ref No.	Designation	Description	Qty	Remarks
2	765-17-247	Lug	1	
1	765-78-1454	Rod	1	

31/4

APPROVED		765-78-C0718		
CHECKED	H M Sh...	ROD	WEIGHT 0.137	SCALE 1:1
CONTROLLERATE OF INSPECTION (ICV)			SHT	SHTS
				78

765-78-6722

[redacted]

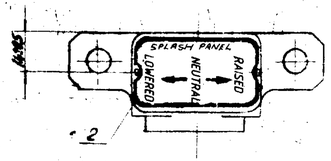

1) Projection of rivets over surface A is not allowed.

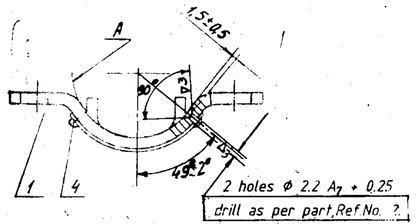

X194
19

Ref.No.	DESIGNATION	DESCRIPTION	Qty.	REMARKS
4	Rivet	2x6.37 GOST 10299-80	2	
2	LV2/ICV 9905-009674 765-78-1513.	Instruction plate	1	REF. DCD 01013-ICV
1	765-78-1448.	Clamp	1	

32

APPROVED	M.VASU	765-78-CB722	
CHECKED	[illegible]	~~CLAMP~~ Ⓐ CLAMP LOOP	WEIGHT 0.041 / SCALE 1:1
CONTROLLERATE OF INSPECTION (ICV)		DS CAT PART NO: CB/R(CV)/LV2/R2 Ⓐ 5340-007659	SHT / SHTS

DC ID NO DATE	ISSUE	NATURE OF AMENDMENT
00358-ICV 08-11-06	Ⓐ July 93	DS CAT NO ADDED AND DESCRIPTION CLAMP LOOP WAS "CLAMP" (DCD CORRECTION)

75

ITEM	ZONE	POS	DESIGNATION	DESCRIPTION	QTY	REMARKS
11			765-78-CG722 -K	ASSEMBLY DRAWING		
				PARTS		
12		1	765-18-1448-K	Clamp	1	
		2				
11		3	765-78-1513 LV 2.1 rev 9905-009674	Instruction plate	1	REF. Dec(1) 01013-1 rev
				STANDARD ARTICLES		
		4		River 2x6.37 GOST 10299-80.	2	

765-78-cd 722K

S.NO	SHT	DOC NO.	SIGN.	DATE
DRAWN BY		L.M.		4.10.07
CHECKED				
APPROV.		SR. MANAGER		

CLAMP.

SHT NO.	TO NO OF SH
1	2

ORDNANCE FACTORY PROJECT HYDERABAD.

765-78-CB 722-K

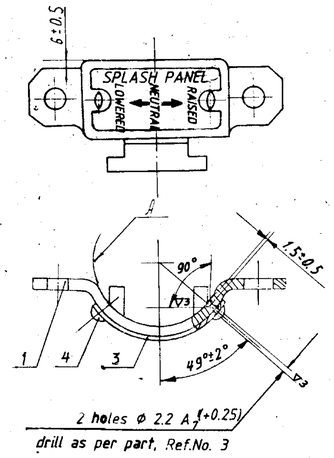

1). Projection of rivets beyond surface A is not allowed.

APPROVED M VASU	765-78-CB 722-K		
CHECKED		WEIGHT	SCALE
CONTROLLERATE OF INSPECTION (ICV)	CLAMP	0.041	1:1
		SHT 2 SHTS 2	

			DESIGNATION	DESCRIPTION	QTY	REMARKS
				Technical papers		
13			765-78-CB794CB	Assembly drawing		
				x 17.4		
				21/1		

APPROVED	M. VASU	765-78-CB794 35	35 of 18
CHECKED	B. MEREDOO	CYLINDER	WEIGHT / SCALE
CONTROLLERATE OF INSPECTION (ICV)			SHT 1 SHTS 3

			DESIGNATION	DESCRIPTION	QTY	REMARKS
				Assembly Unit.		
13		3	765-78-cD795	Cylinder		
				Parts		
11		7	DS CAT PART NO. LV2/ICVS: 4730-007426 765-78-66	ADOPTER ELBOW PIPE ~~Oil seal~~	1	Ref DC CAT No.
11		8	765-78-67	Oil seal	1	
11		9	765-78-68	Nut	2	
12		10	765-78-69	Fork	1	
11		11	765-78-70-K	Ring	4	
11		12	DS CAT No. LV2/ICV 5330-024881 765-78-71-K1	~~Ring~~ Packing	2	Ref. DC CAT No. 00968-ICV
11		14	765-78-1169	Ring	2	
13		15	DS CAT PART NO: LV2/ICVS 5340-017083 765-78-1570	Cover	1	Ref DC CAT No. 00996-ICV
13		16	765-78-1606	Rod	1	
11		19	700-31-576	Washer	1	
		20	765-10-1086	Holder	1	
				X174		
				2/2	38	

APPROVED	M.VASU	765-78-cD794	
CHECKED	H.N Shankar	CYLINDER	WEIGHT / SCALE 2 : 3

CONTROLLERATE OF INSPECTION (LCV)

ZONE	ZONE	REF NO	DESIGNATION	DESCRIPTION	QTY	REMARKS
				Standard items		
		22		Nut M16,6.019, GOST 2526-70		

APPROVED		765-78-CB794	
CHECKED			WEIGHT / SCALE
CONTROLLERATE OF INSPECTION (ICV)		CYLINDER	SHT 3 SHTS 3
		37	

765-78-СБ794СБ

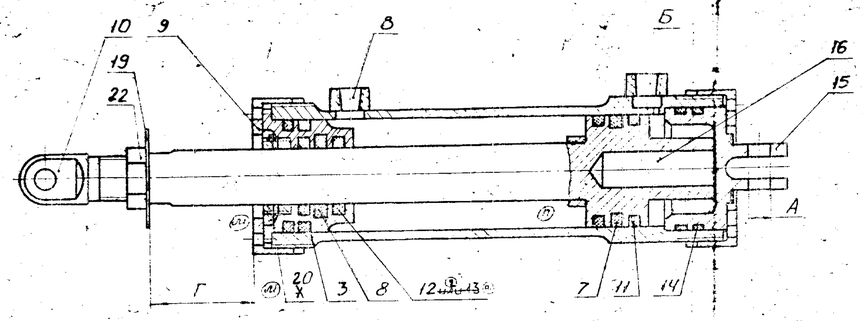

1

1) All metalic parts before assembly should be cleaned and blown with compressed air.

2) Oil seels Ref.No. 7 and 8.,should be impregnated with graphite lubricant cka 2/6г³GOST 3333-80 as per technology ofinstructions 05325289 00002.

3) Prime the external surfaces, except working surfaces with primer ФЛ-03К GOST 9109-81. and paint with enamel ПФ-223,dark gray, GOST 14923-78.

(A) 4) Angular displacement ofaxis of hole A with respect to the axis of hole Б should ~~exceed 3°~~ *not exceed 3°*

5) While mounting carryout locking of nut, ref.No 22,

6) Piston rod, Ref.No. 16, should move under the pressure of air not exceeding 4,0 kg/cm² or by static force not exceeding 40kg without jerking and jamming. In the starting movement of piston rod a force of upto 80kg (P=8 kg/cm²) is allowed.

7) Test the cylinder for leak proofness with air at a pressure of 70⁺¹⁰ kg/cm² for two minutes.

In the first minute drop of pressure not exceedng 3 kg/cm² is allowed , after that drop of pressure is not allowed.

8) While checking as per items 6 and 7, restrict the protrusion of piston rod (Dimension Г is a protru-ded position of piston rod) by upto 100 ± 10mm.

10) Lock punch the thread through slots of nuts, Ref.No,9, after testing.

12) Before trasportation and storage fill hole Б with 5 grams of oil ЦМ6 -16 GOST6360-58 or technical specifications TY38001117-80 and close them with axiliary stoppers. *Land hole Б with 20gms of oil*

13) Before installetion cut oil seals Rff,No 7 and 8 in accordance withthe drawing. Oil seal,Ref.No 8, may not be cut.

14) Insert piston rod Ref.No. 16, in-to the cylinder RefNo.3. from the side of the cover Ref.No. 15,

00417-ICV 01-02-94	(A)	TECHNICAL CONDITION NO.4 AMENDED AS 'SHOULD NOT EXCEED 3°'	
DC (I) NO & DATE	ISSUE	NATURE	
AMENDMENTS			

X 1/1
21/-1

38/11

APPROVED	M.VASU	765-78-СБ794СБ		
CHECKED	H.M.Shastri			
CONTROLLERATE OF INSPECTION (ICV)		CYLINDER (Assembly Drawing)	WEIGHT 1.655	SCALE 1:1

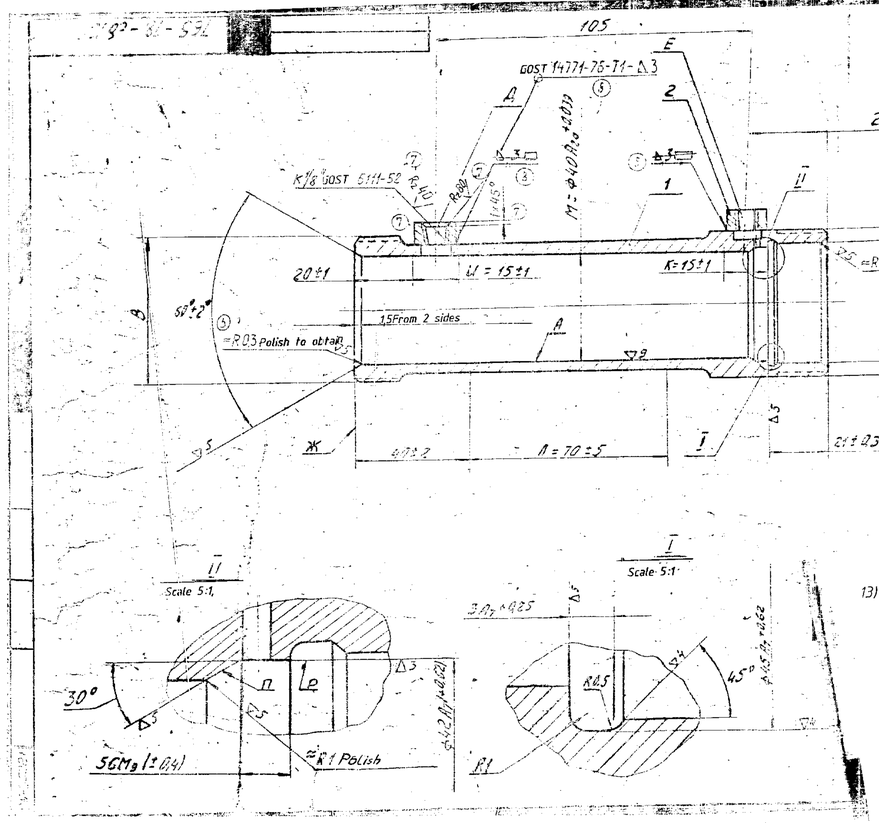

1) Check threads В, Г, А, Е after welding.

2) Test for leak proofness with winter fuel З-05 or summer fuel Л-0.5 GOST 305-73 at a pressure of 90^{+10} kg/cm^2. Leakage and sweating are not allowed.

3) Displacement of bosses along the circumference with respect to each other is allowed by no more than 5mm.

4) Perform Heat-treatment HB 341 to 285 (Ø3.3 to 3.6).

5) Coating of surfaces А Б, П and Р is hard chromium plating, 30 to 160 microns thick. Check dimensions M and H after coating. Do not check coating in groove Ш and on surfaces Р and П. On the groove edge chipping of coating followed by their polishing is allowed.

6) Non squareness of surface А to butt end Ж should not exceed 0.1mm over a length of 50 (qualified tolerance)

7) Quality and taperness of surface А should not exceed 0,02mm.

8) Increase of dimension M by 0.03 above tolerance on sections Ш and К is allowed.

9) A step not exceeding 0.5mm on section Л is allowed.

10) parts, Ref.No 2. Do not check for hardness.

11) Misalignment of bosses, Ref.No 2, with respect to the corresponding holes part 1, should not exceed 1mm.

12) Cut of welds followed by leakproof test is allowed.

13) Other surfaces (except А and П) may be chemically oxidised, oiled.

Ref No.	Designation	Description	Q.ty	Remarks.
2	672-51-40	Boss	2	
1	765-78-1571	Cylinder	1	

ALL SHARP EDGES & CORNERS TO BE ROUNDED OFF	ALL THREADS TO CONFORM TO SPECIFICATION	STAMP OR ETCH, PART NO. MANUFACTURERS NAME & YEAR OF MFR.
DRG. NOT TO BE SCALED		
SCALE :- 1 : 1	TOLERANCE ON DIMENSIONS UNLE -SS OTHERWISE SPECIFIED	USED ON:- 765-78-сб794
DATE :- 16-8-94		
DRN. WT :- (Kg) 0.694	CYLINDER	
TCD.		
CHD.	765-78-сб795	
APD.		

CONTROLLERATE OF QUALITY ASSURANCE
(INFANTRY COMBAT VEHICLES)

ZONE	REF. NO.	DESIGNATION	DESCRIPTION	QTY	REMARKS
			Technical Papers		
12	B	765-78-C5816	Assembly Drawing		
		765-78-101 TT	Technical requirements for production of pipes used in pneumatic system.		
			Parts		
11	2	765-78-1254	Jet	1	
11	3	700-30-241	UNION Nut	2	
11	4	700-57-403	Nipple	1	
11	5	700-57-404	Nipple	1	

40/P

APPROVED	M.VASU	765-78-C5816	
CHECKED	H.N.Shanka		
CONTROLLERATE OF INSPECTION (LCV)		PIPE	WEIGHT / SCALE
			SHT 1 SHTS 2

ITEM	QUANT	REF. NO.	DESIGNATION.	DESCRIPTION.	QTY	REMARKS
			Alternate data for use	765-78-c6816		
				Parts		
6A6			765-78-1597	Pipe	1	W/DRG
				765-78-c6816-01		
				Parts		
6A8			765-78-1598	Pipe	1	W/DRG

41/1

APPROVED		765-78-C6816
CHECKED		PIPE
CONTROLLERATE OF INSPECTION (LCV)		WEIGHT / SCALE
		SHT 2 SHTS 2

765-78-816 [redacted]

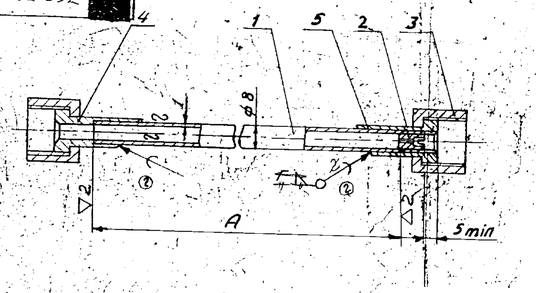

1) Make the part Ref No. 1 of pipe 8x1-20A GOST 19277-73

2) Test the pipe for airtightness in water bath under pressure of 90^{+10} kgf/cm^2 for one minute. Air bubbles are not allowed.

3) Other requirements are as per 765-78-101 TT. Technical requirements.

	Designation	Ref No 1	A	Weight	Weight
		Pipe			
(A)	765-78-cб816cб	765-78-1597	1500 ~~1150~~	0.198	0.250
	-01	765-78-1598	~~1200~~ 1705	0.208	0.260

00555-1CV Anw 23-4-96	(A)	765-78-cб816-LENGTH WAS 1150 765-78-cб816-01-LENGTH WAS 1200
DC (1) No. & DATE	ISSUE	NATURE

AMENDMENTS

MATERIAL :—		
ALL SHARP EDGES & CORNERS TO BE BROKEN UP	ALL THREADS TO CONFORM TO SPECIFICATION	STAMP OR ETCH, PART NO. MANUFACTURERS NAME & YEAR OF MFR
DRG. NOT TO BE SCALED		USED ON:- 675-78-cб2
SCALE :-	TOLERANCE ON DIMENSIONS UNLESS OTHERWISE SPECIFIED	
DATE :- 10-01-1996		
DRN	WT :- (Kg) SEE TABLE	PIPE (ASSEMBLY DRAWING)
TCD		
CHKD		765-78-cб816cб
APD		

CONTROLLERATE OF QUALITY ASSURANCE (INFANTRY COMBAT VEHICLES)

FORMAT	ZONE	REF. NO.	DESIGNATION.	DESCRIPTION.	QTY	REMARKS
				TECHNICAL PAPERS		
12			765-78-CB831 CB	Assembly drawing		FOR DETAILS REFER ASSY. DRG. [PROD NO. 00555100]
			765-78-101TT	Technical requirements on manufacture of pipes of pneumatic system.		
				PARTS		
		2	700-30-241	UNION, nut	2	
		3	700-57-403	Nipple	2	
			NOTE: THE FOLLOWING ITEMS ARE TO BE SUPPLIED WITH COMPLETE CODE 675-78-C112 ONLY.			DC(1)00555 -100
			672-54-5	FRAME	4	
			672-54-6-02	BAND. 800 mm	2	
				SPLIT PIN 6.3x20-019 GOST 397-79	4	
				HOSE 40Y8-1.3(13)TY005-6016-80, L = 150 mm	2.	

APPROVED	M VASU	765-78-CB831 60 OF 492	
CHECKED	D. SWAMY		
CONTROLLERATE OF INSPECTION (ICV)	PIPE	WEIGHT	SCALE
		SHT 1	SHTS 3
		60 OF 154	

FORMAT	ZONE	REF. NO.	DESIGNATION.	DESCRIPTION.	Q.TY	REMARKS.
				MODIFICATION DATA		
				765-78-C6831		
				PARTS		
64		1	765-78-1628	Pipe	1	
				765-78-C6831-01		
				PARTS		
64		1	765-78-1628-01	Pipe	1	
				765-78-C6831-02		
				PARTS		
64		1	765-78-1628-02	Pipe	1	
				765-78-C6831-03		
				PARTS		
64		1	765-78-1628-03	Pipe	1	

APPROVED	M.VASU	765-78-C6831 61 OF 492	
CHECKED	23 5 1989		
CONTROLLERATE OF INSPECTION (ICV)		PIPE	WEIGHT / SCALE
			SHT 2 SHTS 3
			61 OF 154

78

FORMAT	ZONE	REF. NO.	DESIGNATION.	DESCRIPTION.	QTY	REMARKS
				765-78-C6831-04		
				PARTS		
b4		1	765-78-1628-04	Pipe	1	
				765-78-C6831-05		
				PARTS		
b4		1	765-78-1628-05	Pipe	1	
				765-78-C6831-09		
				PARTS		
b4		1	765-78-1628-09	Pipe	1	

APPROVED	M. VASU	765-78-CB831 62 OF 152	
CHECKED	D. S. Kumar		WEIGHT / SCALE
CONTROLLERATE OF INSPECTION (ICV)		PIPE	SHT 3 SHTS 3
			62 OF 154

78

765-78-сб831сб

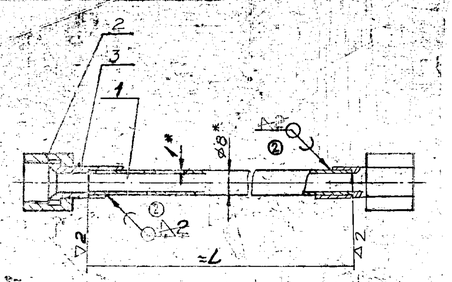

1) Make part Ref No 1, from pipe 8x1-20A GOST 19277-73.

2) Test the pipe for air tightness with air in water tub at a pressure of 18^{+5} kgf/cm^2 for one minute. Appearance of air bubbles is not allowed

3) Other requirements are as per 765-78-101 Technical Requirements TT.

4) Dimensions are given for reference

	Designation.	Ref. No. 1 Designation	L	Mass	Mass
	765-78-сб 831сб	765-78-1628	620	0,107	0,161
Ⓐ	-01	-01	~~290~~ 97	0,052	0,106
Ⓑ	-02	-02	~~560~~ 990	0,097	0,151
Ⓑ	-03	-03	~~1600~~ 760	0,28	0,334
Ⓑ	-04	-04	~~700~~ 1020	0,125	0,179
Ⓑ	-05	-05	~~1200~~ 320	0,215	0,269
Ⓐ	-09	-09	~~600~~ 632	0,103	0,160

Ⓐ NOTE

WHEN THESE PIPES ARE SUPPLIED AS PART OF COMPLETE CODE 675-78-[illegible] FOLLOWING ITEMS ARE REQUIRED TO BE SUPPLIED FOR ASSY. OF THESE PIPES.

a) FRAME - 672-54-6 QTY 4 PER SET.
b) SPLIT PIN 6.3 X 20.019, GOST 397-79 QTY 4 PER SET.
c) HOSE 40Y 8-1-3 (13) TY 005-6016-80, L=1800mm QTY 2 PER SET.
d) BAND - 672-54-6-02, 800 mm QTY 2 PER SET.

DC(1) NO. & DATE	ISSUE	NATURE
00555-ICV 23-4-96	Ⓑ	NOTE ADDED. 765-78-сб831-02 - LENGTH WAS 560; 765-78-сб831-03 - LENGTH WAS 1600; 765-78-сб831-04 - LENGTH WAS 700; 765-78-сб831-05 - LENGTH WAS 1200
00519-ICV 4-7-95	Ⓐ	765-78-1628-01 - LENGTH OF PIPE WAS 290. 765-78-1628-09 - LENGTH OF PIPE WAS 600.

AMENDMENTS

MATERIAL :-

ALL SHARP EDGES & CORNERS TO BE ROUNDED OFF	ALL THREADS TO CONFORM TO SPECIFICATION	STAMP OR ETCH, PART O. MANUFACTURERS NAME & YEAR OF MFR.
ORG. NOT TO BE SCALED		
SCALE :- 1:1	TOLERANCE ON DIMENSIONS UNLE-SS OTHERWISE SPECIFIED	USED ON:- 675-78-сб3, 675-78-сб2
DATE :- 10-01-1996.		
DRN.	WT :- (Kg) SEE TABLE	PIPE (ASSEMBLY DRAWING)
TCD.		
CHD.		765-78-сб 831сб
APD.		

CONTROLLERATE OF QUALITY ASSURANCE
(INFANTRY COMBAT VEHICLES)

770-72-152-K

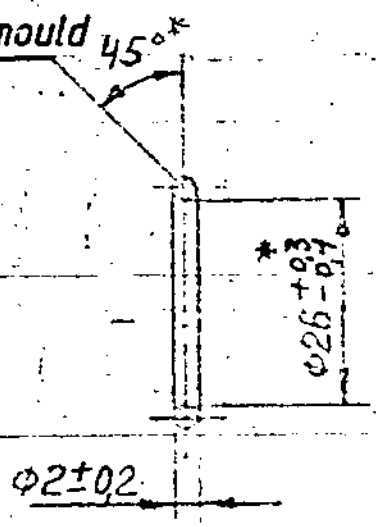

1) *Dimension is provided with tool.

2) Apply marking on the tag.

3) Other requirements are as per technical specifications TY 005216-75, for articles code 253111H n .

79

109/11

APPROVED	M.VASU	770 - 72 - 152 - K		
CHECKED				
CONTROLLERATE OF INSPECTION (ICV)		RING	WEIGHT 0.0005	SCALE 1:1
			SHT	SHTS
		RUBBER B14 TY 005216-75	78	

775-78-62

[redacted]

∇3 Unless otherwise specified.

[redacted]

Permissible version for manufacturing.

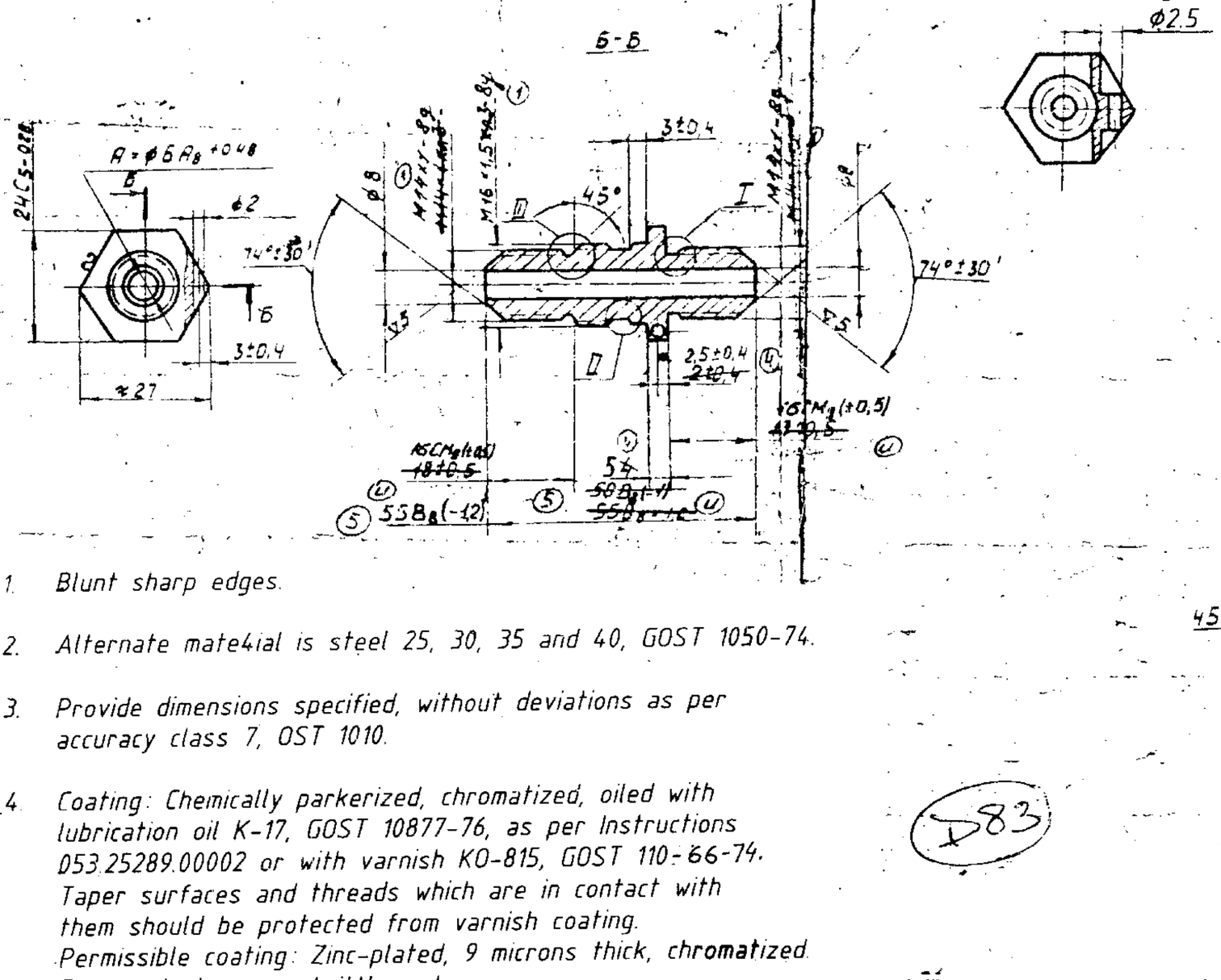

1. Blunt sharp edges.
2. Alternate mate4ial is steel 25, 30, 35 and 40, GOST 1050-74.
3. Provide dimensions specified, without deviations as per accuracy class 7, OST 1010.
4. Coating: Chemically parkerized, chromatized, oiled with lubrication oil K-17, GOST 10877-76, as per Instructions 053.25289.00002 or with varnish KO-815, GOST 110-66-74. Taper surfaces and threads which are in contact with them should be protected from varnish coating. Permissible coating: Zinc-plated, 9 microns thick, chromatized. Remove hydrogen embrittlement.
5. Presence of steps within the limits of tolerance is allowed in hole A.

Ⓐ EQ. MATERIAL :- Gde EN8 (080M40) TO BS:970-83 WITH S & P RESTRICTED TO 0.040 & 0.035 MAX RESPECTIVELY.

MATERIAL :- 45 GOST 1050-74			
ALL SHARP EDGES & CORNERS TO BE ROUNDED OFF	ALL THREADS TO CONFORM TO SPECIFICATION	STAMP OR ETCH, PART NO. MANUFACTURERS NAME & YEAR	
DRG. NOT TO BE SCALED			
SCALE :- 1:1	TOLERANCE ON DIMENSIONS UNLE -SS OTHERWISE SPECIFIED	USED ON:- 765-78-C66	
DATE :- 12.7.95			
DRW.	WT :- (Kg) 0.07	UNION	
TCD.			
CHD.		775-78-62	
APD.			

CONTROLLER ATE OF QUALITY ASSURANCE

Ⓐ	EQ. MATERIAL ADDED	R1005 KCV 24 OCT 05	DC(I) NO. & DATE
	AMENDMENTS	ISSUE	

Подп. и дата | Инв. № дубл. | Взам. инв. № | Подп. и дата | Инв. № подл.

D83