UN CONTROLLED COPY
CERTIFIED CORRECT COPY OF APPROVED
DRAWINGS AT THIS DATE
DESIGN & DRAWING OFFICE,
ORDNANCE FACTORY, TIRUCHIRAPPALI -620 016.

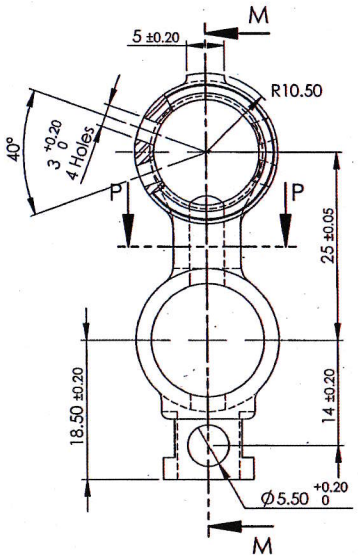

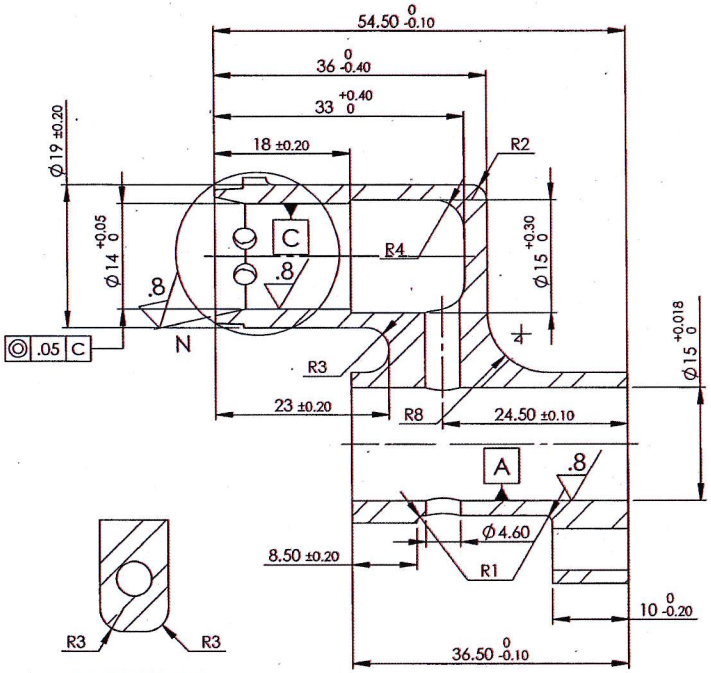

SECTION P-P

SECTION M-M

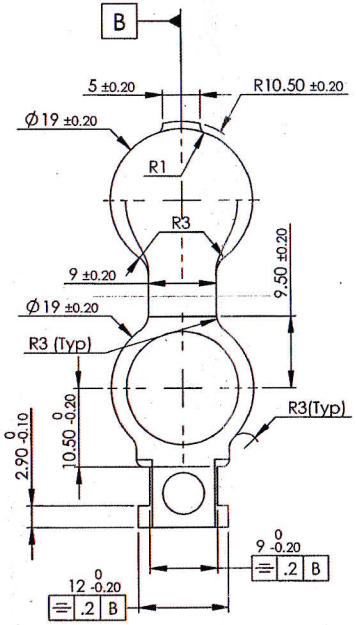

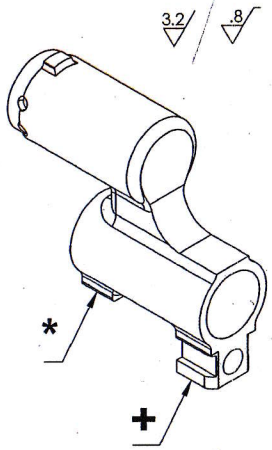

Material :
MIM S7

Hardness:
300-350 HV

Protective Finish :
Black Oxide Coating

Untollerated Dimensions as per IS:2102 (MED)

All dimensions are in mm.

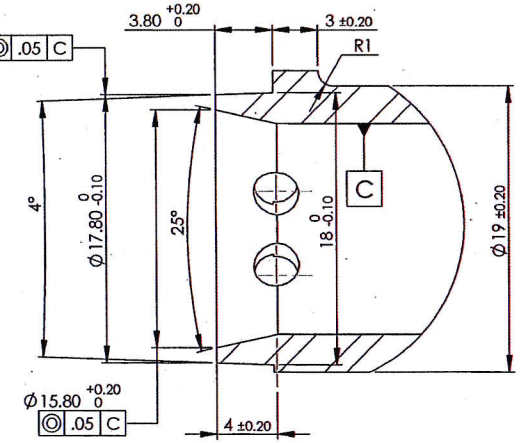

DETAIL N

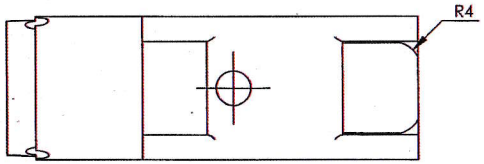

Marking:-
* Manufacturer Code
+ Batch/Year of Manufacture
Engraving Depth 0.1mm & Height 2.5mm

MIM S7 Composition

Element	C	Mn	Si	Cr	Ni	Mo	S	P
Min (%)	0.45	-	0.2	2.5	-	1.0	-	-
Max (%)	0.7	0.5	1.0	3.5	0.3	1.8	0.05	0.05

	SIGNATURE & DATE.
TRACED	
DRAWN	
CHECKED	
OIC/D&DO	
OFFICER/ PRODN.	
DIV.OFFICER/ D&DO	
APPROVED ON. 14/07/2021	

AMENDMENTS | SIG. & DATE

SUB: **GAS PORT BLOCK**
FOR: Barrel Assy
OF: TRICHY ASSAULT RIFLE
DES.REF.NO. K1205
DRG. No.: **MIM-K-1205-00**

ORDNANCE FACTORY
TIRUCHIRAPPALLI–16.

SCALE NTS
QPG 1
Weight(g) 107.49
SHEETS: 1
SHEET No.: 1