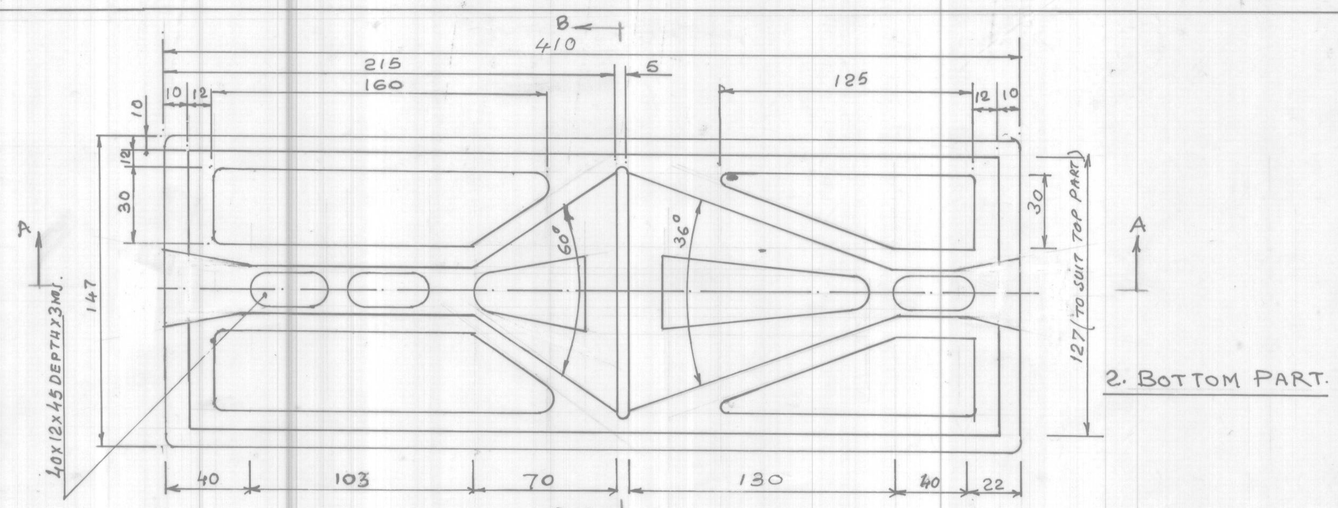

2. BOTTOM PART.

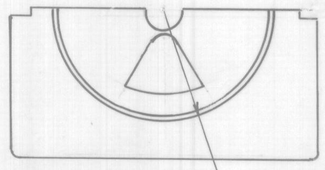

SEC- BB

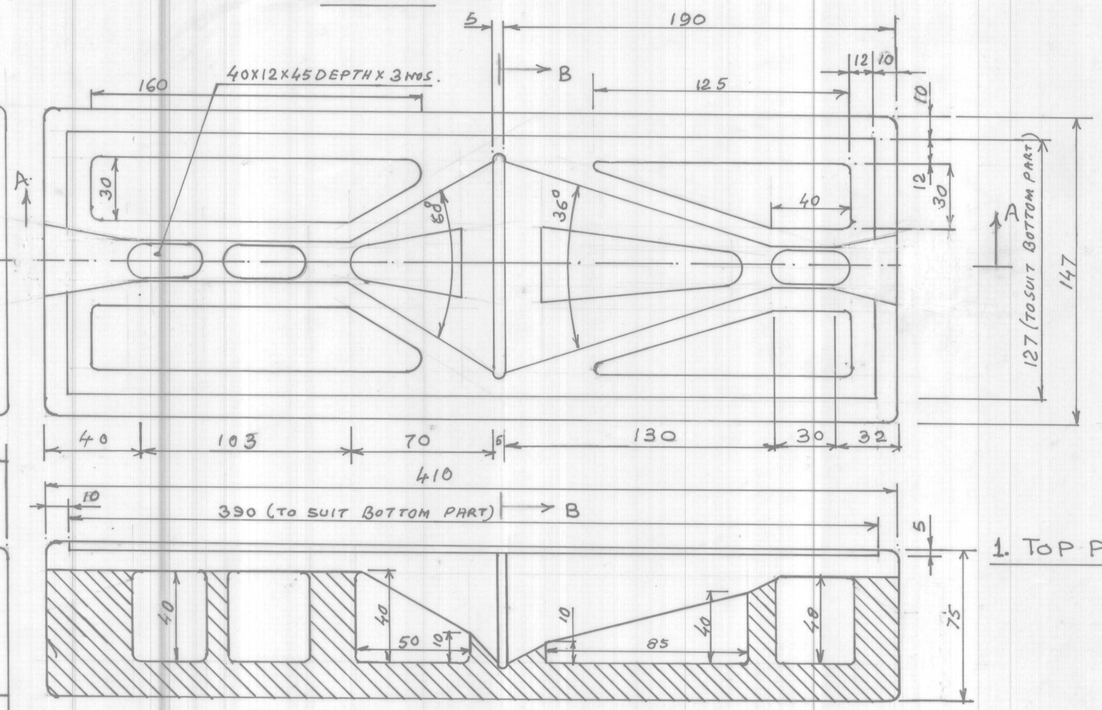

1. TOP PART.

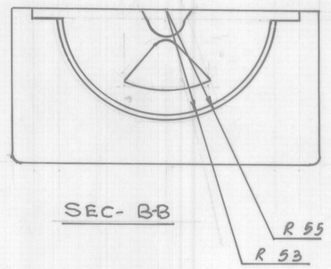

SEC- BB

SEC-AA.

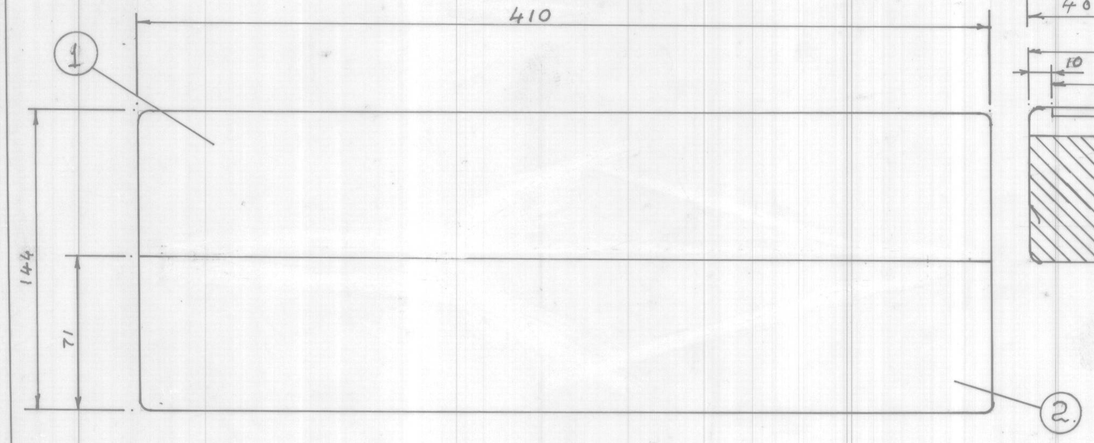

GENERAL ARRANGEMENT.

ITEM NO.	NO. OFF.	MATERIAL	DESCRIPTION
2	1.	THERMOCOLE	BOTTOM PART.
1	1.	THERMOCOLE	TOP PART.

LIST OF PARTS

SCHEDULE NO.		COMPT. 125MM. CONE FUNNEL.	STORE DRG. NO.
SCALE:-	PROJECTION. THIRD ANGLE.		
DRAWN. BY-		PACKING BOX (THERMOCOLE) FOR CONE FUNNEL ASSY.	
TRACED BY-			
CHECKED BY-	27/7/01	DRG. NO. CO-419A	
APPROVED BY-	27/7/01		
APPROVED BY.	27/07/01	M/C :-	NO. OFF SHEETS.
DATE:-	SIGR.	G&S FY. COSSIPORE	SHEET NO.

DT & SG.	DESCRIPTION
19/11/02	delete DIM. 18 DRG NO. ADV. TO CO-419A

AMENDMENTS