DRAWING NUMBER
520.01.004

SHEET No. 1 OF 1

Rz80 (√)

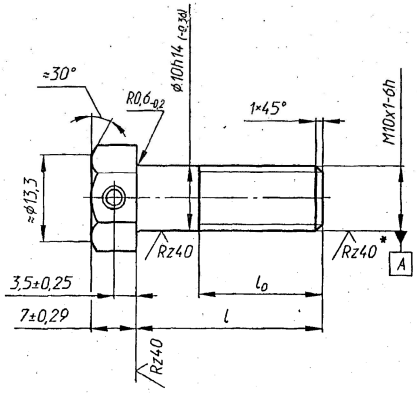

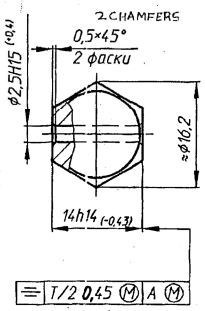

Вариант
ALTERNATIVE

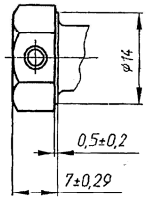

ALTERNATIVE FOR MAKE OF BOLT l > 35 mm
Вариант исполнения болта l>35мм

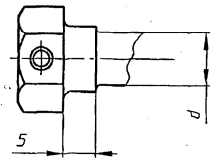

1. Alternate material: Steel 40 GOST 1050-88 and Steel 20nc GOST 10702-78 for bolts 520.01.004-03, 520.01.004-04, 520.01.004-05, 520.01.004-06, 520.01.004-07; Steel 40X TY 3-1053-86 for bolt 520.01.004-01.
2. Diameter d should be within the pitch diameter of thread.
3. Bolt head may be made as per GOST 7796-70 make 1.
4. When making thread by the method of rolling, unthreaded part of rod may be made along the pitch diameter of thread and chamfer at the end of rod is not to be made.
5. Coating Zn 6 Chromotizing.
6. * Surface finish is to be ensured by tool.
7. Other requirements should be as per GOST 1759.0-87 and 520.TY1.

DESIGNATION Обозначение	l, MM NOMIN.	l, MM Пред. откл.	l_0, MM NOMIN.	l_0, MM Пред. откл.	MATERIAL Материал STEEL GOST	WEIGHT Kg Масса, кг
520.01.004	12	LIMIT DEVIATION ±0,8	12	LIMIT DEVIATION ±2,5	STEEL Сталь 40 GOST ГОСТ 1050-88	0,015
-01	16		16		STEEL Сталь 40 GOST ГОСТ 1050-88	0,017
-02	22		22		STEEL Сталь 40 GOST ГОСТ 1050-88	0,020
-03	25		25		STEEL Сталь 20 GOST ГОСТ 1050-88	0,022
-04	30		30		STEEL Сталь 20 GOST ГОСТ 1050-88	0,025
-05	40		26		STEEL Сталь 20 GOST ГОСТ 1050-88	0,031
-06	45		26		STEEL Сталь 20 GOST ГОСТ 1050-88	0,034
-07	50		26		STEEL Сталь 20 GOST ГОСТ 1050-88	0,037
-08	30		30		STEEL Сталь 40 GOST ГОСТ 1050-88	0,025
-09	20		20		STEEL Сталь 40 GOST ГОСТ 1050-88	0,019

PILOT SAMPLE SHOULD BE APPROVED BY A H S P BEFORE BULK PRODUCTION.

EST. WT. (Kg) SEE TABLE

TO BE STAMPED OR MARKED WHERE INDICATED THUS # (LETTERS)

ALL SHARP EDGES AND CORNERS TO BE REMOVED UNLESS OTHERWISE STATED MACHINED CORNERS TO HAVE R OUTSIDE R INSIDE EQUIVALENT CHAMFERS ARE PERMISSIBLE.

ISSUE	DATE	NATURE OF AMENDMENTS
6A	26.11.12	55150/CQA(HV)/DB/BLT T-72 Dt. 19.07.11

DRN	Chaushpanov
CHD	B. Tomy
APPD	Chandel
DATE	17-02-04
SCALE:-	-
DIMENSIONS IN mm	
TOLERANCE ON DIMNS UNLESS OTHERWISE STATED IS : 2102 - 69	
ALL THREADS TO CONFORM TO	

MATERIAL :- STEEL 20 GOST 1050-88

USED ON :- (6A) PV572.0718.0143

CONTROLLERATE OF QUALITY ASSURANCE (HEAVY VEHICLES) AVADI

TITLE :- BOLT

D S CAT NUMBER

DRAWING NUMBER 520.01.004

DRG. INDIANISED BASED ON RUSSIAN ORIGINAL ISSUE - 6

COMMON TO T-72. & BLT

356

SUPPLY CODE U-01-1-1

F - 33 / 4

SIZE A4 x 3