DRG. No. LGT-0364/1

NOTE:-
ALSO TO BE USED AGAINST
REQ. No. 60/IFG/A/2K, dt. 20-9-2[illegible]

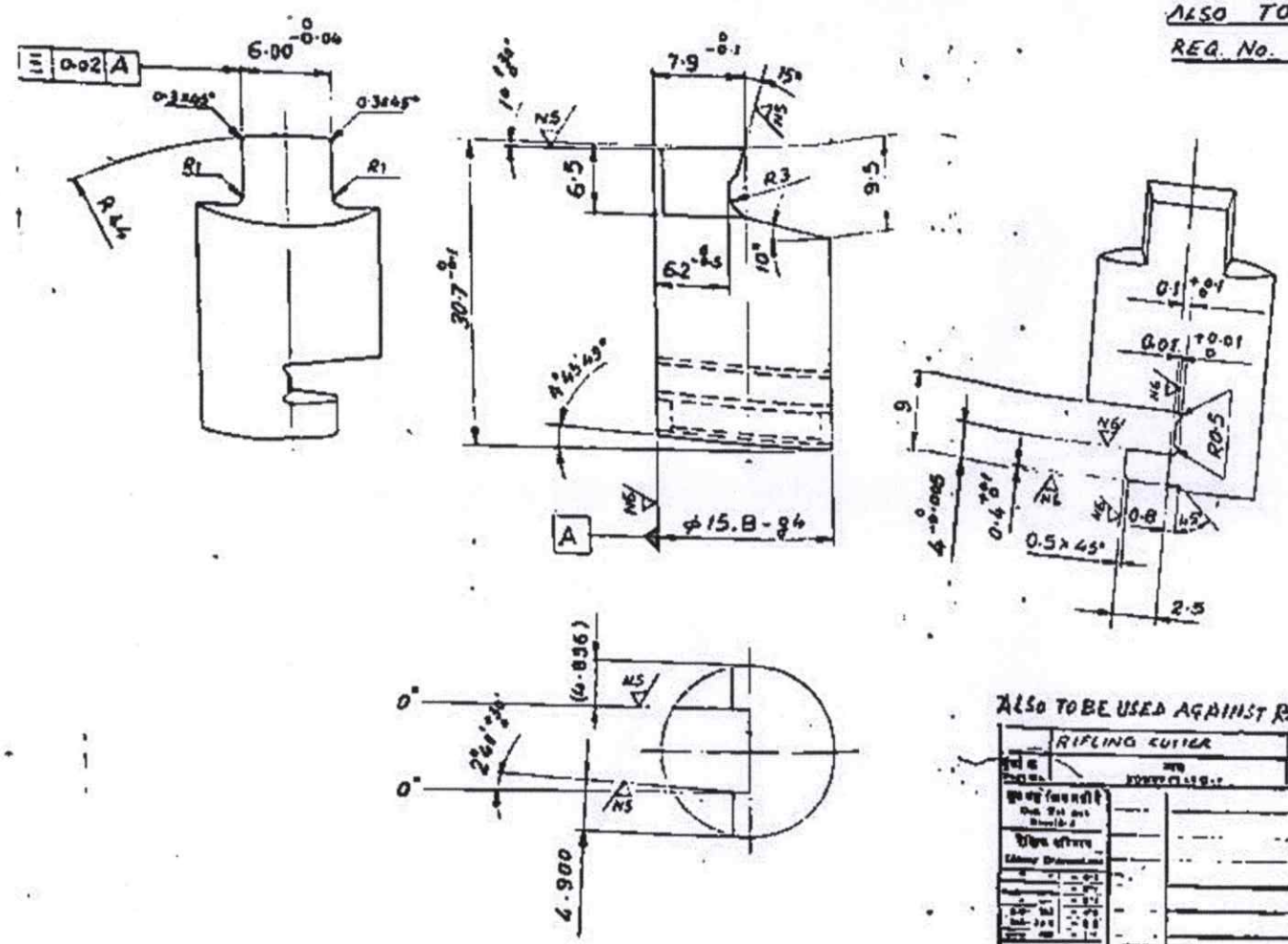

N9 [✓]

ALSO TO BE USED AGAINST REQ No IFG/RS/95, Dt. 13-10-95.

	RIFLING CUTTER		25.3	HT&G	AS SHOWN	66 HRC.

AMENDMENTS

RIFLING CUTTER
FOR
IFG. MK. II

GUN CARRIAGE FACTORY, JABALPUR

for G.M. G.C.F.

1986

IFG(A)

7/RS/85
dt. 5.5.85

32.399.1694

DRG No. LGT-0364/1

φ15.8-g4	-0.006 / -0.011
NOM SIZE & FIT	DEVIATION

NOTE:-
THIS DRG. IS MADE AS PER SAMPLE.