DRG. NO F 0 2 3 0 9 1 0

SEALED
CERTIFIED CORRECT
COPY DATE .....
SIGNATURE .....

The copyright of this drawing and all attachment there of belongs to the Indian Ordnance Factories, Ministry of Defence, Govt. of India. This should not be copied, reproduced in any way or the information contained therein made available to unauthorised persons without the written permission of the Director General of Ordnance Factories.

ALL DIMENSIONS ARE IN INCHES

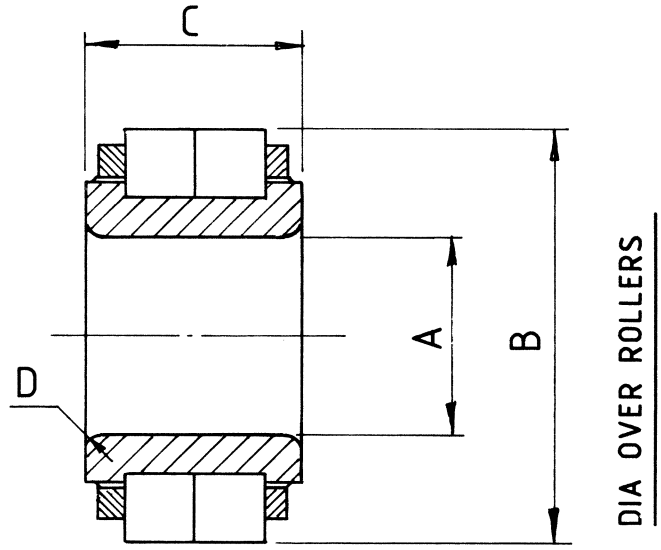

FOR ALTERNATIVE TO 5539 Z 860 SEE R5539 Z1

	A	B	C	D	PART NO	MAKER'S TYPE HOFFMANN	MAKER'S TYPE FISCHER
#	.999 3/4" 1.000 1/4"	2.124 1/4" 2.124 3/4"	1.123" 1.125"	3/32"	5539 Z 860	L 064	FK 1065

Gen.Tol.Not Specified	
Linear Dimension	
0-6	±0.1
6-30	±0.2
30-120	±0.3
120-315	±0.5
315-1000	±0.8
1000-2000	±1.2
Angular Dim.	
0-10	±1°
10-50	±30'
50-100	±20'
> 100	±10'

Index	ALTERATION	Date	JWM	D.O.
	DRG. RETRACED.	4-5-04		

	Date	Name	Approved
Drawn			
Traced	4-5-04	M. SAHA	
Checked	4.5.04	THOSAR	
JWM/STD	4.5.04		Jt.GM/TS

~ Unmachined
▽ Rough
▽▽ Smooth
▽▽▽ Finish
(22) C.Hard
(24) Hardened
(14) Gr after Hard.

Description ROLLER BEARING

For AGB

Group STALLION MK-III

Scale N.T.S.

Ref. Drg.

Replaced by .....

Replacement for .....

VEHICLE FACTORY

F 0230910