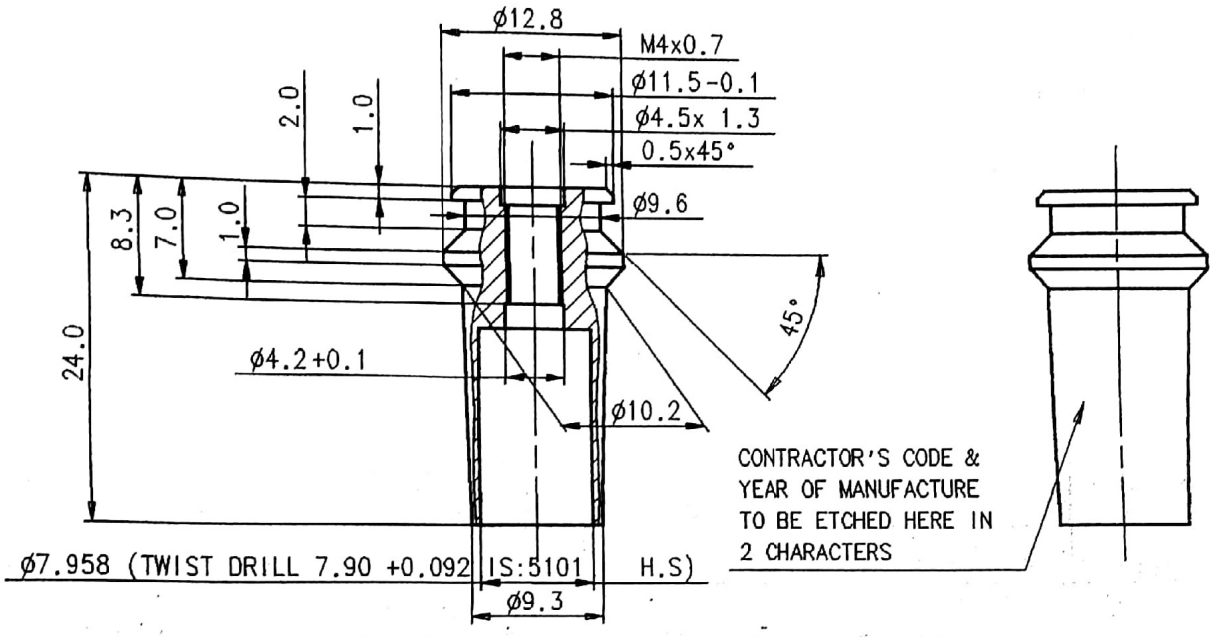

प्रमाणित प्रति / CERTIFIED COPY OF
ड्राइंग / लेआउट / गज शिड्यूल HOJ/MPM
DRG/LAYOUT/GAUGE SCHEDULE
इस समय / AT THIS DATE 20.08-18
सी डी डी / CDD
राइफल फैक्टरी, इशापुर
RIFLE FACTORY ISHAPORE

MATERIAL : STEEL BS 970 PT 5 :1972 GR 070 A72

HARDNESS : 400-500 H.V.

PROTECTIVE FINISH : PHOSPHATED TO SPECN.JSS 0465/01-1988 CLASS-II (ACCELERATED) OIL FINISH

ASSY.DRG.NO. : RFI SK NO. 10200

INDIAN ORDNANCE FACTORIES
RIFLE FACTORY
ISHAPORE

2017	NAME	DATE
DESIGNED	Mustra	4/11
DRAWN		
CHECKED		
APPROVED		24/11

7.62 ASSAULT RIFLE (GHAATAK)

CATCH , TOOL REMOVING RUPTURED CASE

SCALE 2:1

DRAWING NUMBER RFI SK NO. 10201

SHEET- OF-