DRAWING NO.
172.51.021/F

MODIFICATIONS & ADDITIONS		
ISSUE	MODIFICATIONS & N OF A	SIGN.
A	THE SHANK DIMENSIONS ARE MODIFIED IN LINE WITH T 72. DIMNS 369 +2 -4 WAS 374 +3 -4, 154 ±3 WAS 159 ±3 REF. JVM/RG LTR.NO. 07271/TECH.CELL/RG 2004-05 DATED 15.03.05	23/6/05
B	COLLAR THICKNESS 22 mm WAS 15 DIMN. 34 WAS 41 mm REF. CA LTR. 07272/MAIL PLA/RG/2009-10 dt. 20.8.09	27/8

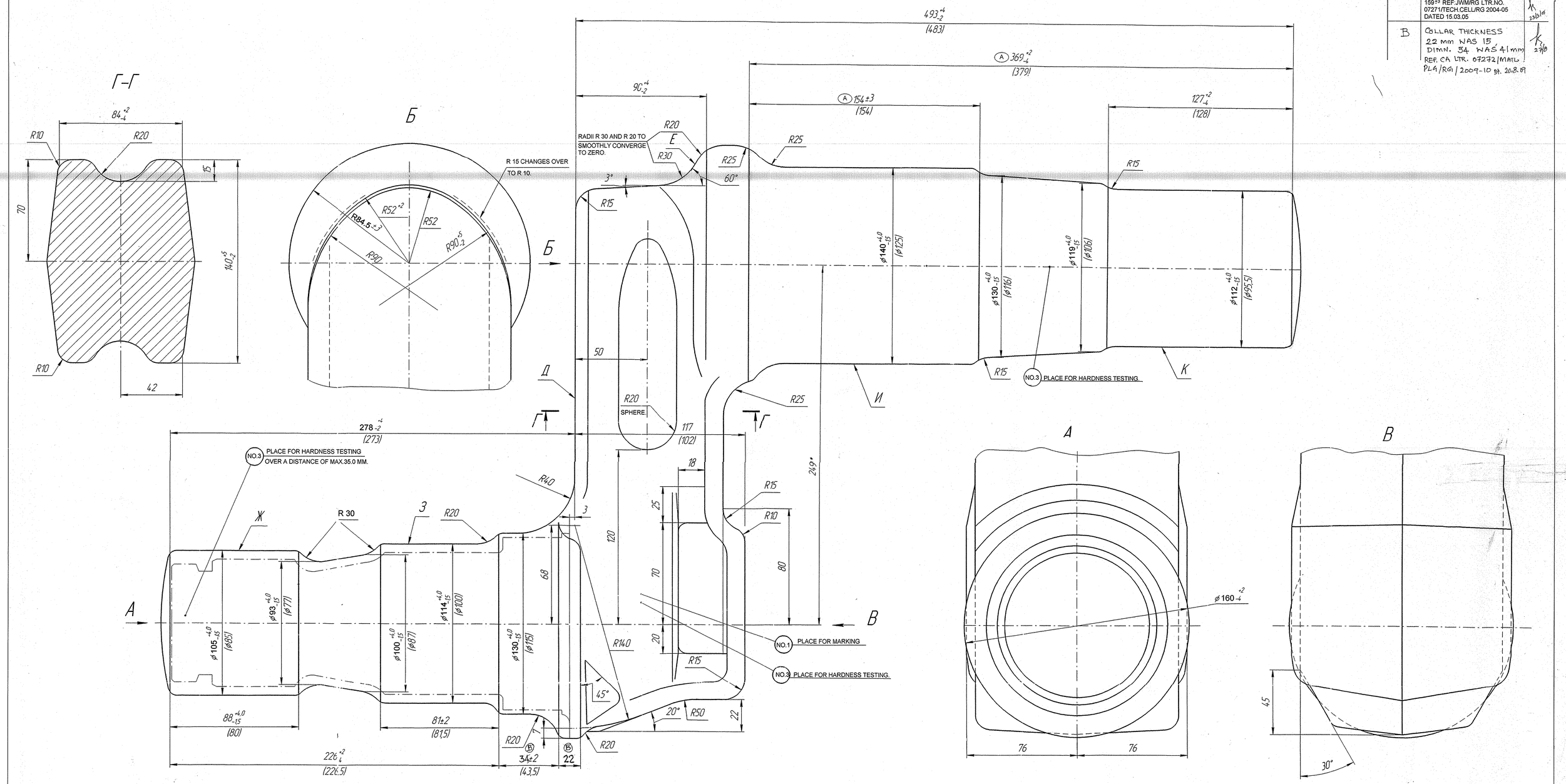

TECHNICAL REQUIREMENTS

01. MARK MELT NO. AND CODE OF SHOP IN-CHARGE.
02. 286...320 HB.
03. MEASURE HARDNESS AT THREE PLACES.
04. DE-SCALES (SHOT BLASTING)
05. ON UN-MACHINED SURFACES RECESSES DUE TO SCALES AND FINISHING OF DEFECTS IN DEPTH 2.0 MM MAX. AND LENGTH 70.0 MM MAX. ON DEPTH 4.0 MM MAX. AND LENGTH 35.0 MM MAX. WITH SMOOTH CHANGE OVER TO MAIN SURFACE MAY ALLOWED.
06. ON SURFACES // AND E RESIDUAL FIN IS NOT ALLOWED, ON THE REMAINING SURFACES ALONG THE PARTING OF DIES, PERMISSIBLE RESIDUAL FIN MAY BE 2.0 MM MAX.
07. PERMISSIBLE CHIPPED SURFACE DEFECTS AND RECESSES DUE TO SCALES SHOULD BE NOT MORE THAN 50% OF ACTUAL MACHINING ALLOWANCE.
08. DISPLACEMENT (SHIFT OF AXES OF DIES) MAY BE 2.0 MM MAX.
09. NON-PARALELLISM OF AXES AT THE FARTHEST POINTS MAY BE 4.0 MM MAX.
10. UNSPECIFIED RADII - R 6 MM.
11. UNSPECIFIED STAMPING DRAFTS - 7
12. DIMENSIONS IN BRACKETS ARE FOR MACHINING.
13. DIMENSIONS WITHOUT TOLERANCES ARE GIVEN FOR MAKING DIE - NOT TO BE CHECKED.
14. RUNS ON SURFACES 3, И, K, ARE NOT ALLOWED.
15. * DIMENSION IS ENSURED BY TOOL AS PER 7 TH ACCURACY CLASS.
16. PAINT RED OXIDE.

NOTE:-
FORGING IS COMMON FOR T-72 & T-90

T-72 & T-90

MATERIAL	FORGING WT.	
40X2H2MA GOST 4543-71	100.50 KGS	
ALT. MATERIAL	HAMMER	SCALE
	EK-32	NTS
DRAWN	CHECKED	APPROVED
23/6/05	23/6/05	27/8/05
DRAWING NO.	172.51.021/F	
NOMENCLATURE:	ROAD WHEEL ARM 1,2,6 SUSPENSIONS.	

HEAVY VEHICLES FACTORY
AVADI, CHENNAI