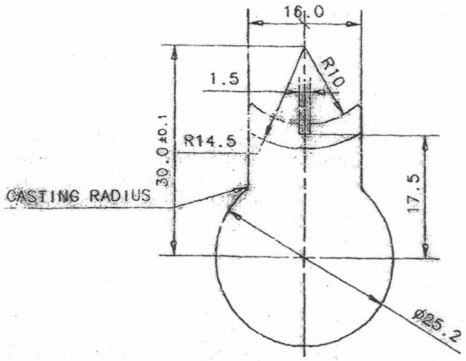

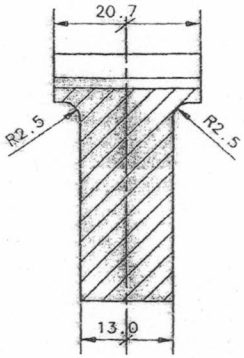

NOTES:-

1 ALL DIMNS. ARE IN mm.

2 UNTOLERANCED DIMNS.TO BE AS PER STD. I.S; 11166-1993 CLASS-1 OF INVESTMENT CASTING.

3 CASTING SHOULD BE FREE FROM DEFECTS LIKE CRACKS, WARPAGE HOT TEARS,COLD SHUTS BLOW HOLES ETC.AND SURFACE FINISH SHOULD BE SMOOTH.

4 VISUAL EXAMINATION SHOULD CONFORM TO GAUGE 8.1 AND 8.2 OF SPECN.I.S:10343-1999 AND A.Q.L.2.5 OF I.S:2500 Pt.1 INSPECTION LEVEL IV.

5 CASTINGS TO BE SUPPLIED IN HEAT TREATED CONDITION i.e. ANNEALING OR NORMALISING, FOLLOWED BY HARDENING & TEMPERING SUITABLE TEMP. TO GIVE THE MECHANICAL PROPERTIES SPECIFIED IN THE DRAWING. HARDNESS OF 248-302 HB SHOULD BE ACHIEVED AFTER HARDENING & TEMPERING.

6 DECARBURISATION SHOULD NOT BE MORE THAN 1% OF THE THICKNESS OF THE CASTING.

7 TEST SAMPLES SHOULD BE CAST FROM THE SAME MELT USED FOR MANUFACTURING OF THE CASTING AND SHOULD BE MADE TO SATISFY THE SPECN.I.S: 10343-1999. RESULT OF THE TEST SHOULD BE FURNISHED ALONG WITH I-NOTE

8 TEST PIECES SHOULD BE TESTED IN ACCORDANCE WITH CLAUSE 1:10 SEC-1 OF SPECN. B.S:3146 Pt.1974.

9 ALL SHARP EDGES AND BURRS IF ANY ARE TO BE REMOVED.

10 MAGNETIC TEST FOR CRACK DETECTION TO BE CARRIED OUT IN SAMPLES AS PER INSPECTION LEVEL IV AT A.Q.L.0.65 AS PER I.S:2500 Pt.1,1992

11 MANUFACTURERS SYMBOL WITH 3 mm. SIZE TO BE STAMPED AS SHOWN IN CASTING.

12 RADIOGRAPHIC ACCEPTANCE STANDARD SHALL BE AS PER ASTM-E-192.GAS HOLES & FOREIGN MATL.LEVEL-5. SHRINKAGE LEVEL -3.CRACKS,COLD SHUTS,HOT TEARS ETC. ARE NOT ACCEPTABLE.

RADIOGRAPHIC TEST TO BE CARRIED OUT AS FOLLOWS:-

i) 100% FROM SAMPLE LOT FROM EACH SUPPLIER.THE LOT SHOULD NOT BE LESS THAN 10 NOS.

ii) 5% FROOM REPEATATIVE/BULK SUPPLY UNTIL THE PRODUCT IS ESTABLISHED BY THE VENDOR.

iii) 10 TO 15 NOS.SAMPLE CASTING DULY PASSED BY INSPECTOR IN RADIOGRAPH TEST,MATL.DIMNS.ETC. TO BE SENT TO THIS FACTORY FOR MACHINING & FITMENT TRIAL BEFORE BULK SUPPLY.

14 INGATE TRACE TO BE REMOVED BY MACHINING FROM CASTING TO CONFORM DRAWING GEOMETRY.

15 TEST PIECE TO BE EXAMINED FOR TENSILE STRENGTH,IZOD VALUE, HARDNESS OF 248-302 HB AFTER HARDENING & TEMPERING.

16 ALL DRAWING DIMENSIONS TO BE CHECKED AFTER HEAT TREATMENT AS PER RFI GAUGE SCHEDULE.

17 THE SUPPLIER WILL MANUFACTURE 02 SETS OF INSPECTION GAUGE AND GET IT VERIFIED BY RFI.

18 MACHINABILITY TO BE TESTED BY DRILLING ø2 HOLES, THROUGH ON ATLEAST 02 SAMPLES.

19 THE SUPPLIER WILL MANUFACTURE 02 SETS OF INSPECTION GAUGE AND GET IT VERIFIED BY RFI.

MATERIAL:

BS: 3146 Pt.1 1974 TYPE CLA 5 Grade A

HEAT TREATMENT: 250-300 VPN

प्रमाणित प्रति / CERTIFIED COPY OF
ड्राइंग / लेआउट / गेज शिड्यूल DRG/LAYOUT/GAUGE SCHEDULE
दिनांक / AT THIS DATE 27.02-18
सी डी डी / CDD
राइफल फैक्टरी, इशापुर
RIFLE FACTORY, ISHAPORE

INDIAN ORDNANCE FACTORIES RIFLE FACTORY ISHAPORE	2018	NAME	DATE
	DRAWN	M M KARMAKAR	22.01.18
	CHECKED		
	APPROVED	J.C.M/Q	
12 BORE PUMP ACTION GUN I C MAGAZINE TUBE LOCKING HOLDER	SCALE	DRAWING NUMBER RFI.SK-8972-G	
		SHEET	OF

APPROVED BY

JWM/SC/MS