PART NO.	DRG. CONVENTIONS CONFORM TO IS: SPECIFICATIONS
IQX 316	DIMENSIONS ARE IN mm.

DC:26194–A

GEN. TOL. MEDIUM CLASS TO IS:2102.–1969

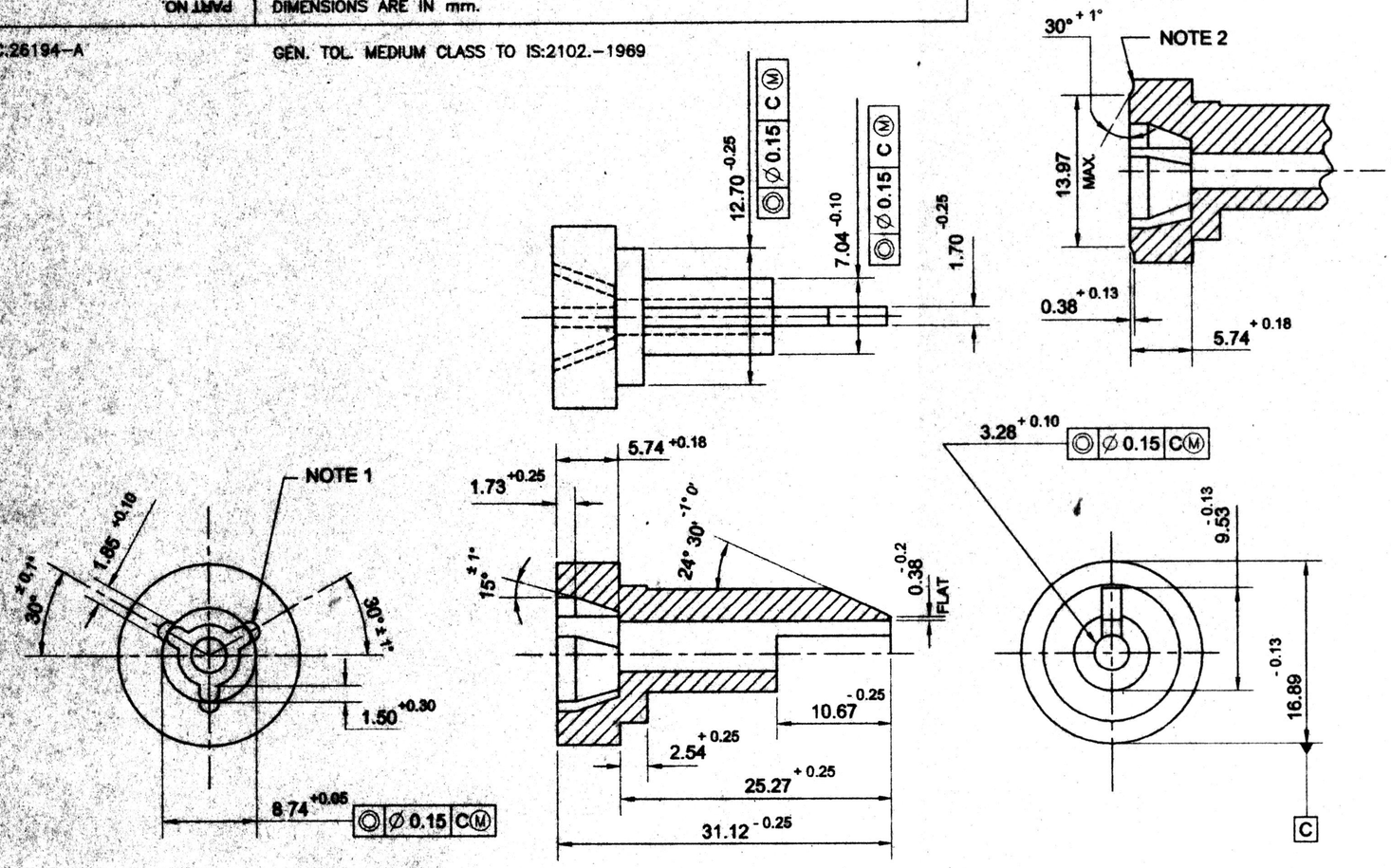

NOTES:-

1) RADIUS EQUALS ONE- HALF WIDTH
2) LIP TO ALLOW FOR SATISFACTORY CRIMPING OF PLUG IN PLACE OPTIONAL.

TECHNICAL REQUIREMENTS SPEC. CQA(A) 1803 (e)

PROTECTIVE FINISH:-

FOR ZINC MATERIAL CROMATE PASSIVATION TO IS 1340: 1977 & FOR ALUMINIUM ALLOY ANODISING TO DEF 151 TYPE 2.

MATERIAL :-

ZINC BASE ALLOY TO IS 742 :1981 ALLOY A DIE CAST TO JSS 0464-01(SEP.86) CLASS I OR ALUMINIUM ALLOY TO IS 617:1975 AMD 3 DESIGNATION 4223 WP OR ALLOY 4600 PRESSURE DIE CAST TO JSS 9530-01(FEB.83) CLASS I.

R. NO.	DATE	AUTHORITY	REVISION	ZONE	AHSP	D.O.
	25-01-05	36997–A	REDRAWN WITHOUT CHANGE & NEW MASTER COPY REPLACED IN SUPERSESSION OF EXISTING DILAPIDATED COPY OF SAME No.			
			PREVIOUS DCs Nos.26739–A, 26931–A, 26962–A, 27973–A, 28860–A,30037–A,31193–A, 34967–A,35137–A, & 35573–A.			

SIG.

DRG.SEALED:- 24–04–62

DRN:-	CHD:-	TRD:-	COMP:-
C.D'MAN	SD/– O I/C D.O.	SCALE:- NTS	
		EST.MASS:- 8 g.	
APPD.	SD/– FOR CQA(A)	GAUGE SCHD:- I. 1094	
		DATE:- 08-09-61	

MATL:- AS ABOVE

PROTECTIVE FINISH:- AS ABOVE

ASSY.DRG. IQX 18 A

DESIGNER'S REF. I .A. 1901

19 SHEETS SHEET 10

PART NO. IQX 316

D.S. CAT NO.

AHSP: CQA(A) KIRKEE

TRIGGER

TS–1/CAD/082 (Dt.15/04/2005)

BASED ON DRG. 0 / 7548299