D.S.CAT NO. 1005-001571

D D NOTE SHEET NO.3

DIMNS. ARE IN mm.

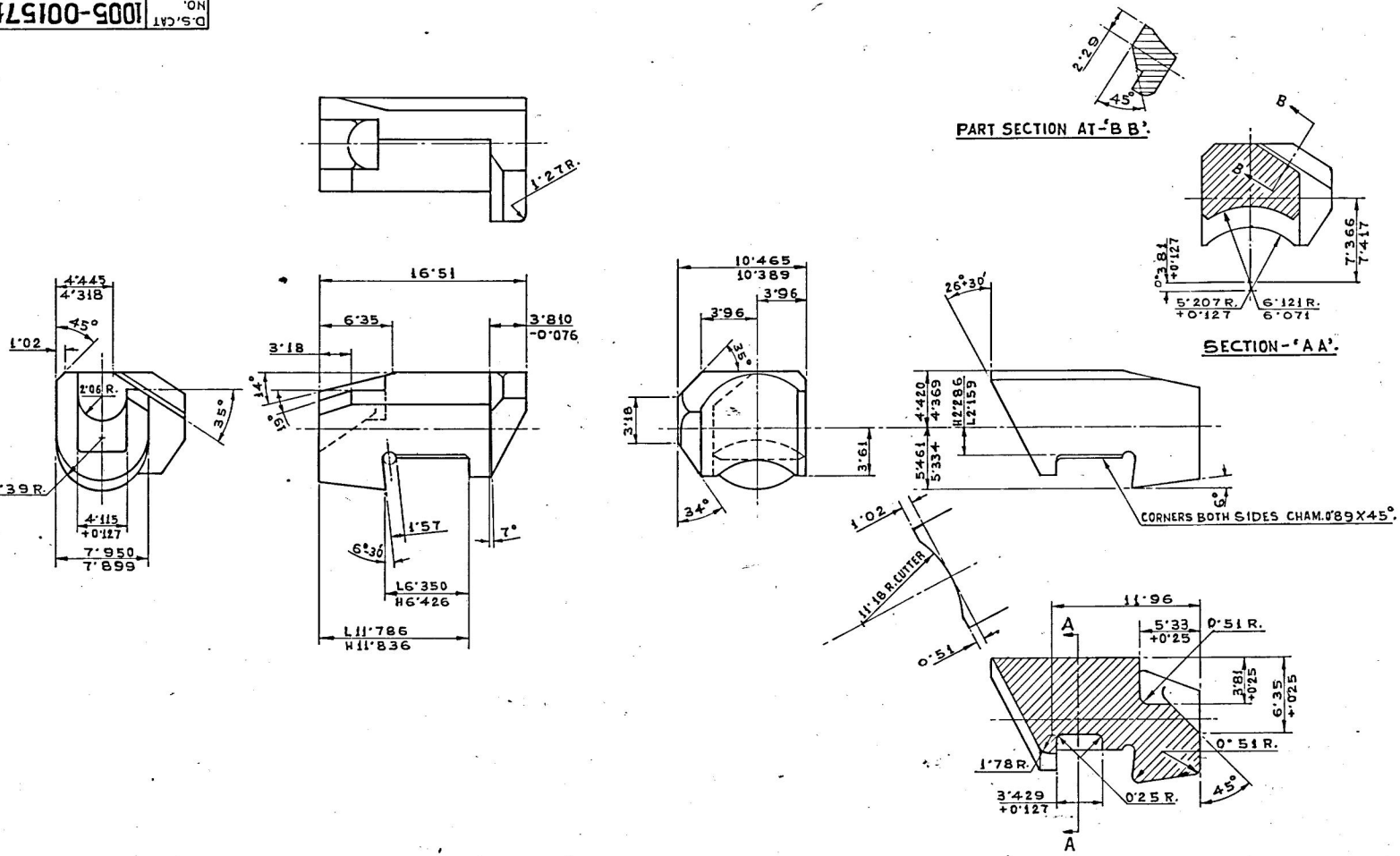

NOTES:-

ACCEPTANCE STANDARDS FOR MACROETCH TEST & MICROSCOPIC DETERMINATION OF NON-METALLIC INCLUSIONS FOR STEEL.

(1) MACROETCH TEST AS PER ASTME-381 WITH ACCEPTANCE STANDARDS C2 R2 S2.

(2) NMIR TEST AS PER IS:4163-82. WITH ACCEPTANCE STANDARDS A,B,C,D=3 MAX. (THIN) AND 1 MAX. (THICK).

FOR SPECN. LATEST ISSUE SHOULD BE FOLLOWED

METRIC

24891-SA	5.12.2000		NMIR TEST NOTE AMENDED		
24674-SA	25.3.2000	1,2/D	PROCESS OF HEAT TREATMENT NOTE DELETED		
22786-SA	2-1-95		NEG. RETRACED AND DRG. RE-SEALED.		
			PREVIOUS D.C.NOS.15028-SA,16018-SA,19625-SA,20460-SA,20633 & 21931-SA.	COPY	
AUTHY.	DATE	ZONE	BRIEF RECORD	CD	GO
SEALED		D.C. 15028-SA, DT.14.2.77			
NOMENCLATURE			EXTRACTOR		

DGN.	DRN.	CHD.		TRD.	COMP.	ASSY.	1005-001569
DT.2.1.95	I/C; D.O.	I/C; TECH. DIV.		GAUGE SCH.		SCALE	
APPROVED				D.C.L		DGNR'S	ARDE NO. 657/199
DT.19.6.67	NEG.RE-TRACED.			EST. MASS		REF.	DET. / SHTS / SHT.
MATERIAL	BS 970 PT. 1 SEC. 4 Gr. 835 M-15.					DRG.NO./ PART NO.	
H.T/HARDNESS	CASE CARBURISED TO A HARDNESS OF 500 TO 550 HV.(63-64.5 HRD).					AHSP.	CQA(SA) ICHAPUR
SURFACE FINISH						D.S. CAT. NO.	1005-001571
PROTECTIVE FINISH.	PHOSPHATE TO SPECN. JSS.0465-01:1988 CLASS-I OIL FINISH.						

Create PDF files without this message by purchasing novaPDF printer (http://www.novapdf.com)