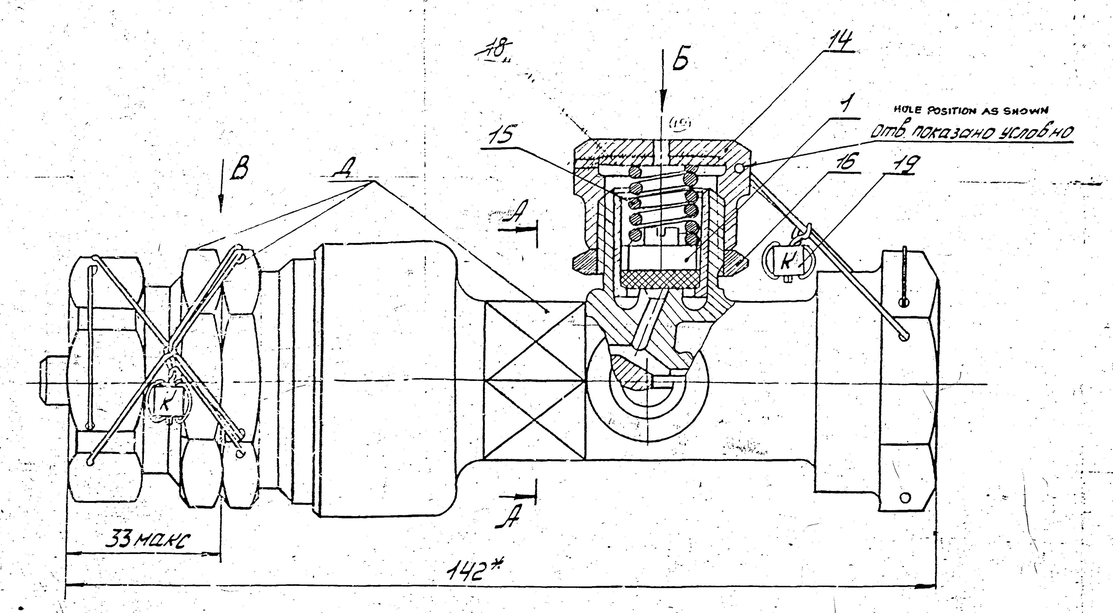

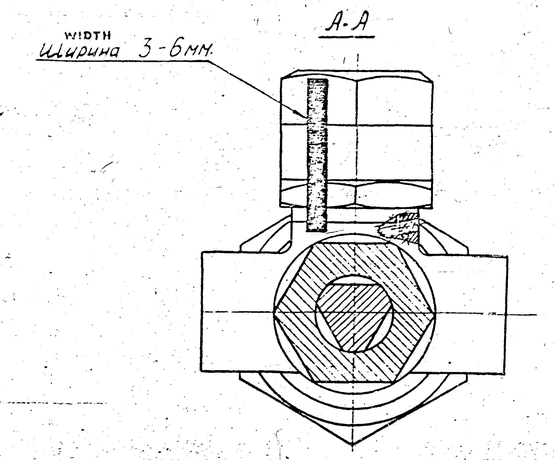

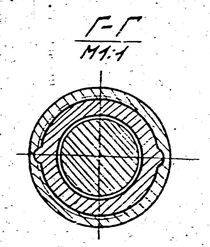

1a. NUT 9 SHOULD BE TIGHTENED WITH A TORQUE OF (15 +1 Kg Cm) 147 +10 N.M

1. ASSEMBLY AND TESTING OF PRESSURE REDUCER SHOULD BE CARRIED OUT ACCORDING TO PROCEDURE LAID DOWN IN SPECIFICATIONS FOR THE PRESSURE REDUCER.
2. INLET AND OUTLET OF VALVE SHOULD BE PLUGGED WITH TRANSPORTATION END CAPS УЛ641, SCREWING THEM IN AS FAR AS MAY WILL GO.
3. AFTER CARRYING OUT ADJUSTMENT AND TESTING, PRESSURE REDUCER SHOULD BE LOCKED WITH WIRE 25, SEALED WITH SEAL 19 AND MARKED WITH TWO LINES WITH ENAMEL M Ø - 223, RED (2) III H GOST 14923-78.
4. * DIMENSION FOR REFERENCE.
5. MANUFACTURE OF PRESSURE REDUCER FOR EXPORT OR FOR USE IN TROPICAL COUNTRIES SHOULD BE CARRIED OUT IN ACCORDANCE WITH SPECIFICATIONS. TY580-214-76.
6. AFTER ASSEMBLY PLACES WITH DAMAGE TO CADMIUM COATING ON SURFACE "A" SHOULD BE COATED WITH VARNISH AK-113 GOST 23832-79 MIXED WITH POWDERED BROUZE CTY 49-1078-61.
7. Punch 70kg/cm² as shown while manufacture as per УЛ611-150-70 К Сб and mark with red enamel.
8. Punch 25kg/cm² as shown while manufacture as per УЛ611-150-25 К Сб and mark with red enamel.

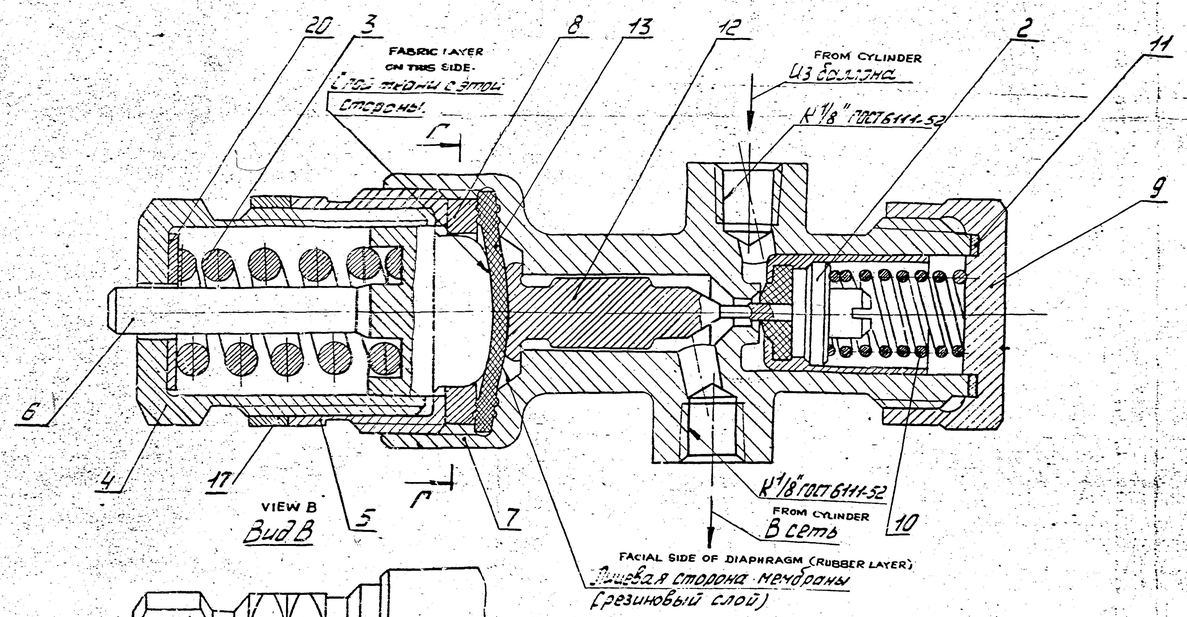

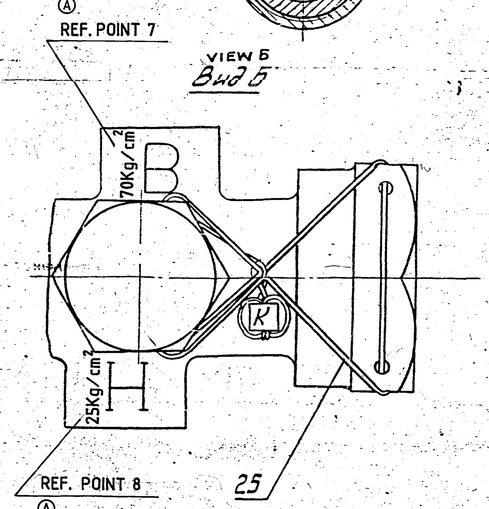

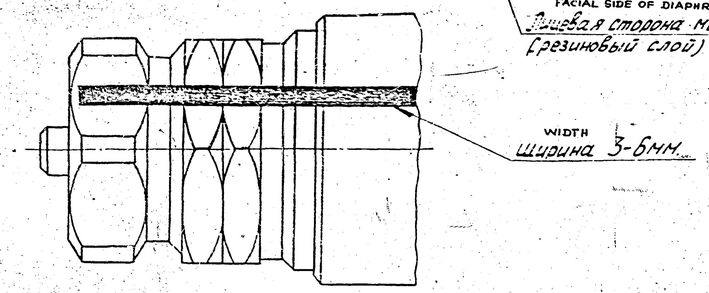

			EST. MASS 0,745 Kg	TO BE STAMPED OR MARKED WHERE INDICATED THUS #
A	1.3.13	11th ALT. COMM. MTG. MIN. POINT. No. 18	ALL SHARP EDGES AND CORNERS TO BE REMOVED UNLESS OTHERWISE STATED MACHINED CORNERS TO HAVE R OUTSIDE R: INSIDE EQUIVALENT CHAMFERS ARE PERMISSIBLE	
ISSUE	DATE	NATURE OF AMENDMENTS	MATERIAL	USED ON: 65-48-042 Сб 172-86-098 375 60 080 Сб
DRN		SCALE - 2 : 1		
CHD		DIMENSIONS IN mm	CONTROLLERATE OF INSPECTION (HEAVY VEHICLES) AVADI	
TCD		TOLERANCE ON DIMNS UNLESS OTHERWISE STATED	TITLE: PRESSURE REDUCER	
APPD		ALL THREADS CONFORM TO		
DATE			D S CAT NUMBER	DRAWING NUMBER УЛ 611-150-20/70 КСб

F-3 279

KVD No. 72853