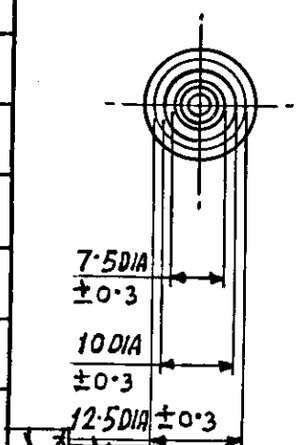


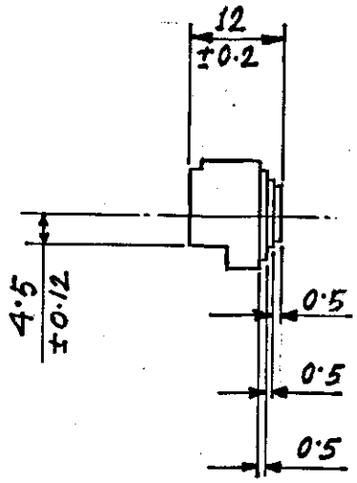


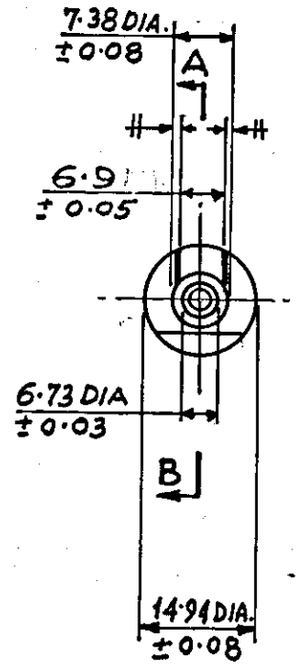


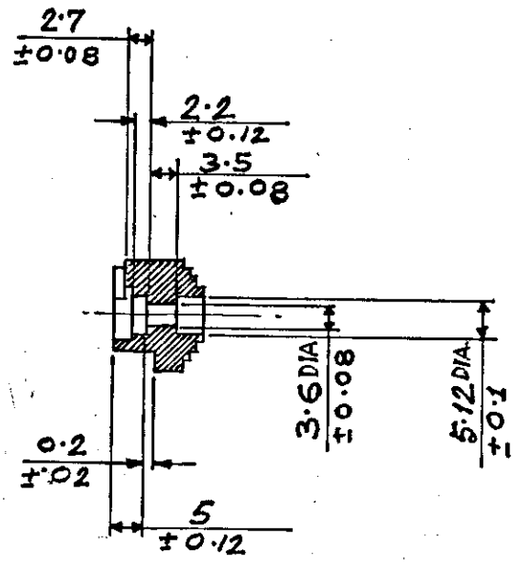


| AUTHY. | DATE | ZONE | BRIEF RECORD | SIG. |
|---|---|---|---|---|
| 21671-SA | 30.3.92 | | D S CAT NO. ADDED | LT. COL. |
| 23238-SA | 24-1-96 | H/2 I/2 J/2 | TOL. ADDED. | JSO |
| 25307-SA | 26.03.2002. | | RECORD OF RECEIPT CANCELLED AND DRG. SEALED AFRESH | JSO |

MATERIAL:-
NYLON TYPE 6GP OR 66GP BLACK TO SPECN. DEF. STAN. 93-8/I

SECTION A-B

THE BEST POSSIBLE CONCENTRICITY IS REQUIRED BETWEEN THE DIFFERENT PARTS.

| AUTHY. | DATE | ZONE | BRIEF RECORD | SIG. |
|---|---|---|---|---|
| 20968-SA | 27.10.90 | | CL. NEG. RETRACED & DRG. RESEALED AS A RECORD OF RECEIPT | LT. COL. |
| | | | PREVIOUS D.C(I) NOS 15535-SA, 16136-SA & 16598-SA. | COPY. |

| | DATE | NAME |
|---|---|---|
| DGN. | | |
| DRN. | | |
| CHD. | | |
| TRD. | 28-8-90 | |
| COMP. | 28-8-90 | |

C.D.O.

SCALE :- 1:1

SEALED:-D.C. NO. 25307-SA. DT. 26.03.2002.

ASSY. 1005-000529

MATERIAL:- AS STATED.

DIMENSIONS ARE IN MILLIMETRES

KNOB, BARREL LOCKING CATCH.

CQA(SA) ICHAPUR

APPROVED CL. NEG. RE-TREACED.

DRG. NO. A 1256

PART. NO. 28 B

DS. CAT. NO. 1005-000529