FORGING DRAWING

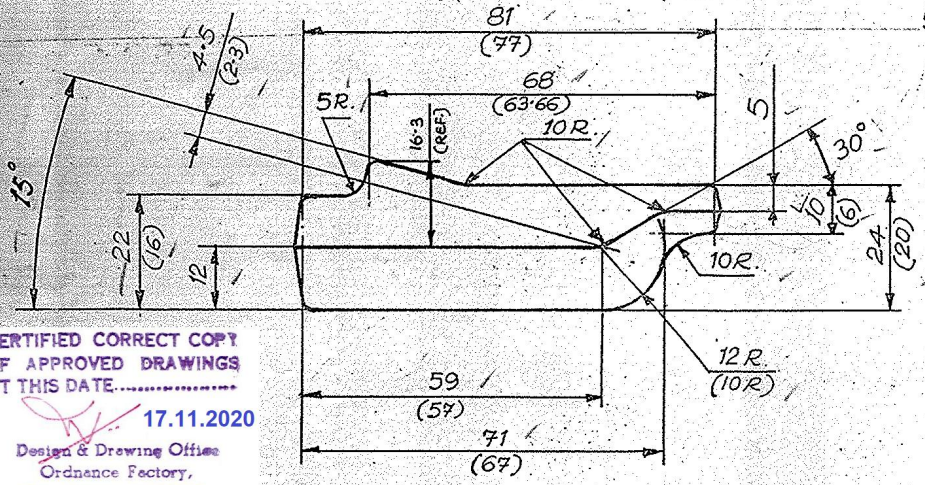

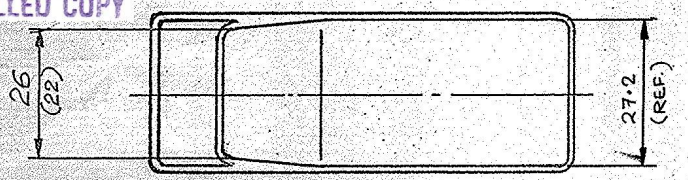

DIRECTION OF ROLLING

CHEMICAL COMPOSITION OF THE MATERIAL :- 30XH2MΦA-a

C	0.27 - 0.34	Si	0.17 - 0.37
Mn	0.30 - 0.60	Cr	0.6 - 0.9
Ni	2.0 - 2.40	Mo	0.2 - 0.3
V	0.10 - 0.18	P	0.025 MAX.
S	0.025 MAX.	Cu	0.30 MAX.

3-91

INDIGENOUS MATERIAL : BS 970 Pt ~~1-85~~ Gde 826 M31. COND. "Z" (OR) IS 5517-93 DESIGN. 31 Ni 10 Cr3 Mo6 LRS 63 mm (TENSILE STRENGTH 1550 MPa)

A SEPERATE TEST SAMPLE IS TO BE HEAT TREATED AND TESTED IN 'Z' CONDITION.

AUTHY: CGRAM LY. No. MQA-3/73/B DT. 2-5-92.

HEAT-TREATMENT PROCESS CHART

NOMENCLATURE AND IDT. NO :	STEEL GRADE	TYPE OF OPERATION	EQUIPMENTS	TEMP. IN °C	TIME	COOLING MEDIUM	FIXTURE	HARDNESS INSPN. %
SEAR STOP C 5029	30XH2MΦA	NORMALIZATION HEATING	ELECTRIC CHAMBER FURNACE	850-870	3 HOURS	AIR	ON TRAY	3%, BUT NOT LESS THAN 3 PIECES.
		HIGH TEMPERING HEATING	ELECTRIC CHAMBER FURNACE OR ELECTRIC SHAFT FURNACE	660-680	5 HOURS	WITH FURNACE UPTO 500°C AIR	ON TRAY	

1. DRESS THE PLACE FOR HARDNESS TESTING
2. TEST HARDNESS

1-2 PIECES FROM A BATCH ARE SUBJECTED TO GRAIN FLOW BY THE METALLURGIST'S LABORATARY.

THE FINISHED COMPONENT SHOULD ATTAIN A HARDNESS RANGE OF HRC3 43.5 TO 51.5 AFTER FINAL HEAT-TREATMENT

NOTES :-

1. DIMENSIONS ARE IN mm.
2. FIRST ANGLE PROJECTION
3. SCALE :- 1:1
4. HEAT-TREATMENT :- NORMALIZING & HIGH-TEMPERING HARDNESS HB 255 MAX.
5. DE-SCALING :- SHOT BLASTING
6. DISPLACEMENT IN PARTING LINE SHOULD NOT BE MORE THAN 0.5 mm.
7. REMAINDER FLASH ALONG DIE PARTING LINE SHOULD NOT BE EXCEED 0.7 mm.
8. SURFACE DEFECTS :- SHOULD NOT EXCEED 0.5 mm. IN DEPTH.
9. UN-SPECIFIED DRAFT ANGLE 7°.
10. UN-SPECIFIED RADII 2 mm.
11. ALLOWANCES ARE AS PER II CLASS GOST 7505-74 M2
12. TOLERANCES ARE AS PER II CLASS GOST 7505-74 C2 AND AS FOLLOWS

    VERTICAL $^{+1.1}_{-0.5}$

    HORIZONTAL $^{+1.2}_{-0.6}$

    DIE FORGING ON HAMMER

13. NUMBER OF PARTS OBTAINED FROM ONE DIE FORGING: ONE PIECE.
14. DIMENSION BETWEEN BRACKETS ARE FOR MACHINING.
15. STAMPING OF CONVENTIONAL SEAL OF BLACK SMITH П0-5 GOST 2930-62
16. WEIGHT OF THE FORGING ~~0.300 Kgs.~~ 0.400 kg
17. RAW MATERIAL SIZE :- $30\Phi^{+0.4}_{-0.7} \times 90 \pm 10$ LONG (HOT ROLLED)
18. MATERIAL :- 30XH2MΦA-a OST 3-98-80

CERTIFIED CORRECT COPY OF APPROVED DRAWINGS AT THIS DATE 17.11.2020
Design & Drawing Office
Ordnance Factory,
Tiruchirappalli-620016

UN CONTROLLED COPY

VETTED FOR MATERIAL ONLY
AS PER LAST DC (I) No. 18291 W
DT. 3/9.96
(M. JAGADISH)
Sr. Scientific Officer
Sr. Quality Assurance Estt (Ammo)
Tiruchirappalli-620016.

SL. NO	AMENDMENTS	SIG & DATE
(4)	DA-No. 006/98 Dt. 24-4-98	24/4/98
UPDATED.	DA-No. 022/97 Dt. 23-3-97	23/2/97
C (3)	DA No. 058/96 Dt 27/6/96	27/6/96.
B (2)	DA-No. 027/95 Dt. 13-4-95	13/4/95
(1)	STORE DRG. NO ADDED	25/2/94

FOR COMPONENT NO 2A42-05-029 -SEAR (1)

REDRAWN	CHECKED	APPROVED	I/E PROJ.	WM/PROJ.	ORDNANCE FACTORY TIRUCHIRAPALLI-16	DRG NO: 64 C 5029 200 C3
04/05/88		6/88		10/6/88		

ALB. NO. 364/22