ITEM	DRAWING NUMBER	D S CAT NUMBER	DESCRIPTION	No. OFF	REMARKS
	CG3338-402-4C6 & ITEM LIST		BODY OF SUPER CHARGER ASSY		
1	CG 3338-403-2 & ITEM LIST		SUPER CHARGER COVER ASSY	1	TM (A)
2	CG 3338-427 & ITEM LIST		BODY OF BUSHING ASSY	2	
5	3338-420-3		SUPER CHARGER BODY	1	TM (A)
6	3338-432-1		SHAFT BUSHING	1	
			IMPELLER		
7	3338-498		PLUG	2	FOR SPARE PARTS
10	340-294-1		COVER	1	FOR SPARE PARTS
11	402-28-1		BUSHING	2	TM (A)

038/29

ISSUE	DATE	NATURE OF AMENDMENTS	ISSUE	DATE	NATURE OF AMENDMENTS
A	24-4-95	AUTHY. BK 86-190			

DRN		CONTROLLERATE OF QUALITY ASSURANCE (HEAVY VEHICLES) AVADI
CHD		TITLE: BODY OF SUPER CHARGER
TCD		
APPD		
DATE	28-4-95	SHT. No. 1 OF 2 — D S CAT NUMBER — ITEM LIST FOR CG 3338-402-4C6

USED ON	ITEM	DRAWING NUMBER	D S CAT NUMBER	DESCRIPTION	No OFF	REMARKS
	14	350 - 03 ✓		STUD M6 X 24	4	
	15	350 - 15 ✓		STUD M8 X 35	12	
	16	350 - 37 ✓		STUD M8 X 51	8	
	17	352 - 31 ✓		DOWEL 5h6 X 14	2	
Ⓐ	18	354 - 22 ✓		LOCKING WIRE	4	FOR SPARE PARTS
				L = 120 MM		
	19	356 - 51 ✓		LOCK WOOD SCREW	2	
	20	356 - 57		LOCK WOOD SCREW	4	
	21	356 - 63 - 3 ✓		PLUG	6	
Ⓐ	22	356 - 84 - 1		BOLT M6 X 20	3	

CD 3338-401-10

ISSUE	DATE	NATURE OF AMENDMENTS	ISSUE	DATE	NATURE OF AMENDMENTS
A	24-4-95	AUTHY BK 86-190			

DRN		CONTROLLERATE OF QUALITY ASSURANCE (HEAVY VEHICLES) AVADI
CHD		TITLE: BODY OF SUPER CHARGER ASSY
TCD.		
APPD		
DATE	28-4-95	SHT No 2 OF 2 — D S CAT NUMBER — ITEM LIST FOR CG3338-402-4C6

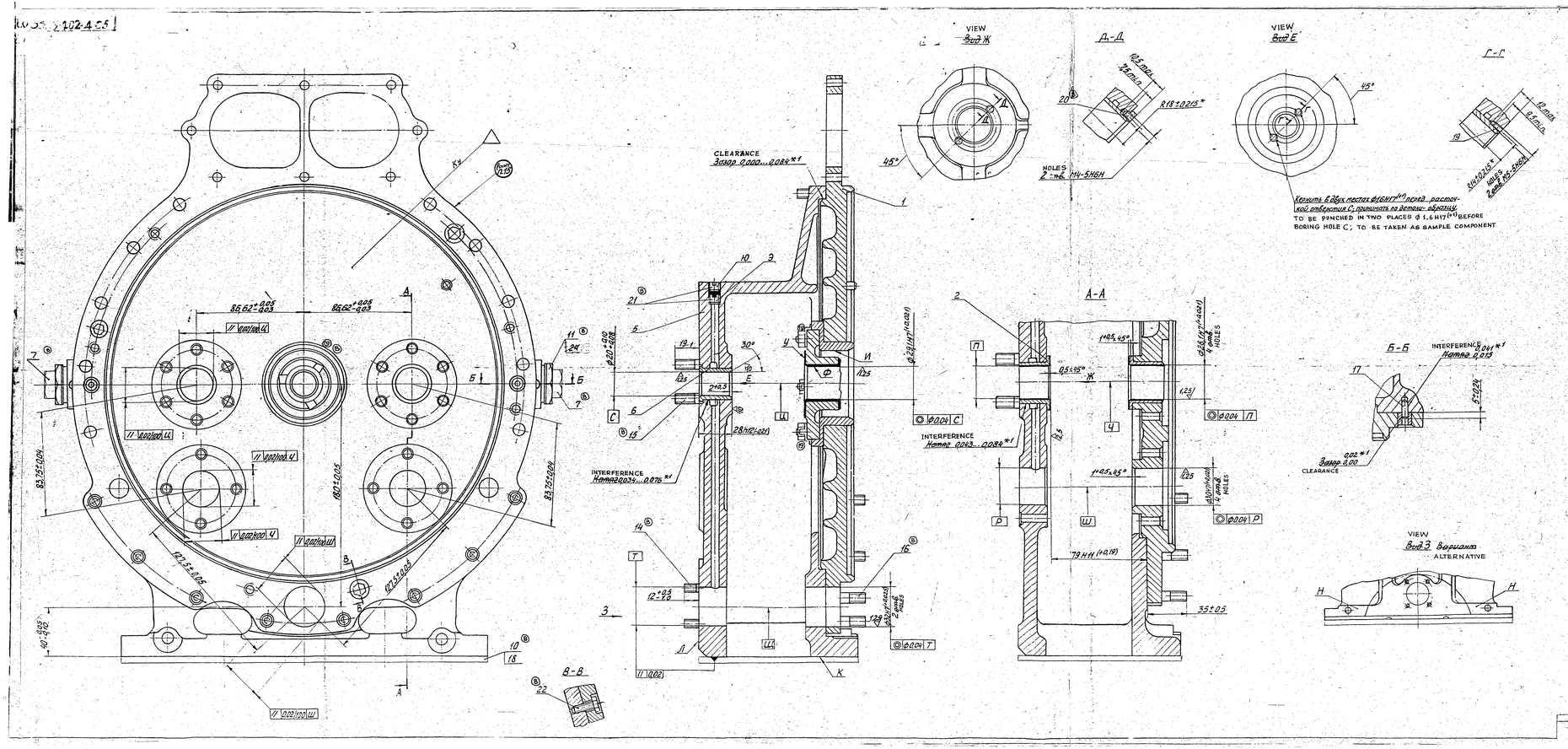

NOTE:-

1. WOOD SCREWS 19 AND 20 ARE TO BE SCREWED AS FAR AS POSSIBLE; TO BE SET ON SEALANT АН-5МА ТУ 6-01-1288-84. AS PER ИЛ-652-86. PROJECTION OF WOOD SCREWS OVER SURFACE IS NOT ALLOWED.
2. WHILE BORING HOLES, OIL DUCTS OF BODY SHOULD BE PROTECTED FROM FALLING-IN OF CHIPS. OIL DUCTS OF THE BODY SHOULD BE CLEAN.
3. RADIAL THICKNESS OF LEAD LAYER OF BRONZE; ON BUSHINGS - (0.8 ± 0.25) mm, ON ROTOR BEARING - (0.65 ± 0.25) mm; TO BE ENSURED BY TOOL.
4. TOLERANCE OF CYLINDRICITY AND OVALITY OF HOLES П, С AND Ф - 0.008 mm. (SEMI-DIFFERENCE OF DIAMETERS).
5. TOLERANCE OF PERPENDICULARITY OF AXIS 'Ш' TO SURFACE 'Л' (OR TO SURFACE 'Н') SHOULD BE 0.05 mm OVER 250 mm LENGTH.
6. DEVIATION FROM PERPENDICULARITY OF SURFACE 'У' TO HOLES 'Ф' AND 'С' SHOULD BE CHECKED BY BLUEING UP TO LEAD COATING; IMPRINT SHOULD NOT BE LESS THAN 70% TO BE CHECKED AFTER TIGHTENING OF NUTS SECURING THE BEARING.
7. DEVIATION FROM FLATNESS OF SURFACE 'К' SHOULD BE CHECKED BY BLUEING. IMPRINT SHOULD BE UNIFORM OVER AREA OF 1 cm² NOT LESS THAN TWO SPOTS.
8. PROTECTION OF BUSHINGS 2 AND 6 OVER SURFACE 'А' IS NOT ALLOWED.
9. OIL DUCTS ARE TO BE CHECKED FOR LEAK-PROOFNESS WITH OIL МТ-16П ГОСТ 6360-83 OR WITH OIL М-16ИХП-3 (М-16 Вг) ГОСТ 25770-83 AT A PRESSURE OF (1.1 ± 0.4) MPa [(11 ± 1) kgf/cm²] AND TEMPERATURE 80° to 100°C FOR 2 MINUTES. LEAKAGE THROUGH THE WALLS AND PLUGS 21 ARE NOT ALLOWED.
10. PLUG 9 SHOULD BE TIGHTENED AS FAR AS POSSIBLE UP TO THE STOP. SPACE BETWEEN THE FACES OF PLUGS 9 AND 10 ARE TO BE FILLED WITH EPOXIDE GLUE No.1 BY COLD HARDENING AS PER ИЛ-110-74. QUANTITY OF GLUE BETWEEN PLUGS SHOULD BE IN SUCH A WAY THAT DURING SCREWING OF THE PLUG 10, THE GLUE SHOULD COME OUT THROUGH THE THREADS. SINKING OF PLUG 10 NOT MORE THAN 1 mm IS ALLOWED. PROJECTION IS NOT ALLOWED.
11. DURING THE ABSENCE OF OXIDATION, SURFACE 'Ц' SHOULD BE COATED WITH PRESERVATING OIL К-17 ГОСТ 10877-76.
12. BEFORE SETTING BUSHINGS П ON THREAD OVER A LENGTH NOT LESS THAN 8 mm FROM THE END FACE OF HEAD SEALANT АН-5МА ТУ6-01-1288-84 TO BE APPLIED AS PER ИЛ-652-86
13. BASE SURFACES К AND Л (OR Н) ARE TO BE PROTECTED FROM NICKS.
14. BEFORE PRESSING THE BUSHINGS THE BODY SHOULD BE HEATED TO A TEMPERATURE OF 60° to 100°C; TO BE PRESSED AS FOR AS POSSIBLE.
15. PAIR NOS. OF COVER AND BODY ARE TO BE MARKED BY PUNCHING.
16. FOR ASSEMBLY UNITS IN TROPICAL MAKE, COMPONENTS AND ASSEMBLY UNIT, HAVING CONVENTIONAL DESIGNATION "ТН" IN THE PARTS LIST OF GIVEN DRAWING IN COLUMN "REMARKS", SHOULD HAVE TROPICAL DESIGN AS SPECIFIED IN THE DRAWINGS OF COMPONENTS AND ASSEMBLY UNITS.
17. INSTEAD OF PLUG 7, COMPONENT 1Б6-038 MAY BE SET WITH SOVARTOUT UNIT НТП 46.
18. * TO BE ENSURED BY TOOL.
19. *1 DIMENSIONS FOR REFERENCE.
20. TO BE SUPPLIED WITH CERTIFICATES.
21. STUDS 16 SHOULD BE SET ON SEALANT АН-5МА ТУ6-01-1288-84 AS PER ИЛ-652-86.

22. FOR ASSEMBLY UNIT IN TROPICALIZED MAKE THE COMPONENTS AND ASSEMBLY UNIT AVAILABLE IN PARTS LIST OF GIVEN DRAWING IN COLUMN "REMARKS" CONVENTIONAL DESIGNATION "ТН" SHOULD HAVE TROPICALIZED MAKE AS SPECIFIED IN THE DRAWINGS FOR COMPONENTS AND ASSEMBLY UNITS.

PILOT SAMPLE BUILD BE APPROVED BY A H S P BEFORE BULK PRODUCTION

EST MASS 14 kg	TO BE STAMPED OR MARKED WHERE INDICATED THUS .S (LETTERS)
ALL SHARP EDGES AND CORNERS TO BE REMOVED UNLESS OTHERWISE STATED MACHINED CORNERS TO HAVE R OUT-SIDE R MODE EQUIVALENT CHAMFERS ARE PERMISSIBLE.	

B	28-6-85	АГТНУ. Б.К. 86-1103	28-6-85
ISSUE	DATE	NATURE OF AMENDMENTS	

DEN — MATERIAL —
CHD
TCD
APPD
DATE 28.4.85
SCALE 1:1
DIMENSIONS IN mm
TOLERANCE ON DIMENSIONS UNLESS OTHERWISE STATED ±0.2
ALL THREADS TO CONFORM TO
D S CAT NUMBER

USED ON:- СД3358-401-10

CONTROLLERATE OF QUALITY ASSURANCE (HEAVY VEHICLES) A V A D I

TITLE BODY OF SUPER-CHARGER ASSEMBLY DRAWING

DRAWING NUMBER СД 3358-402-4СБ

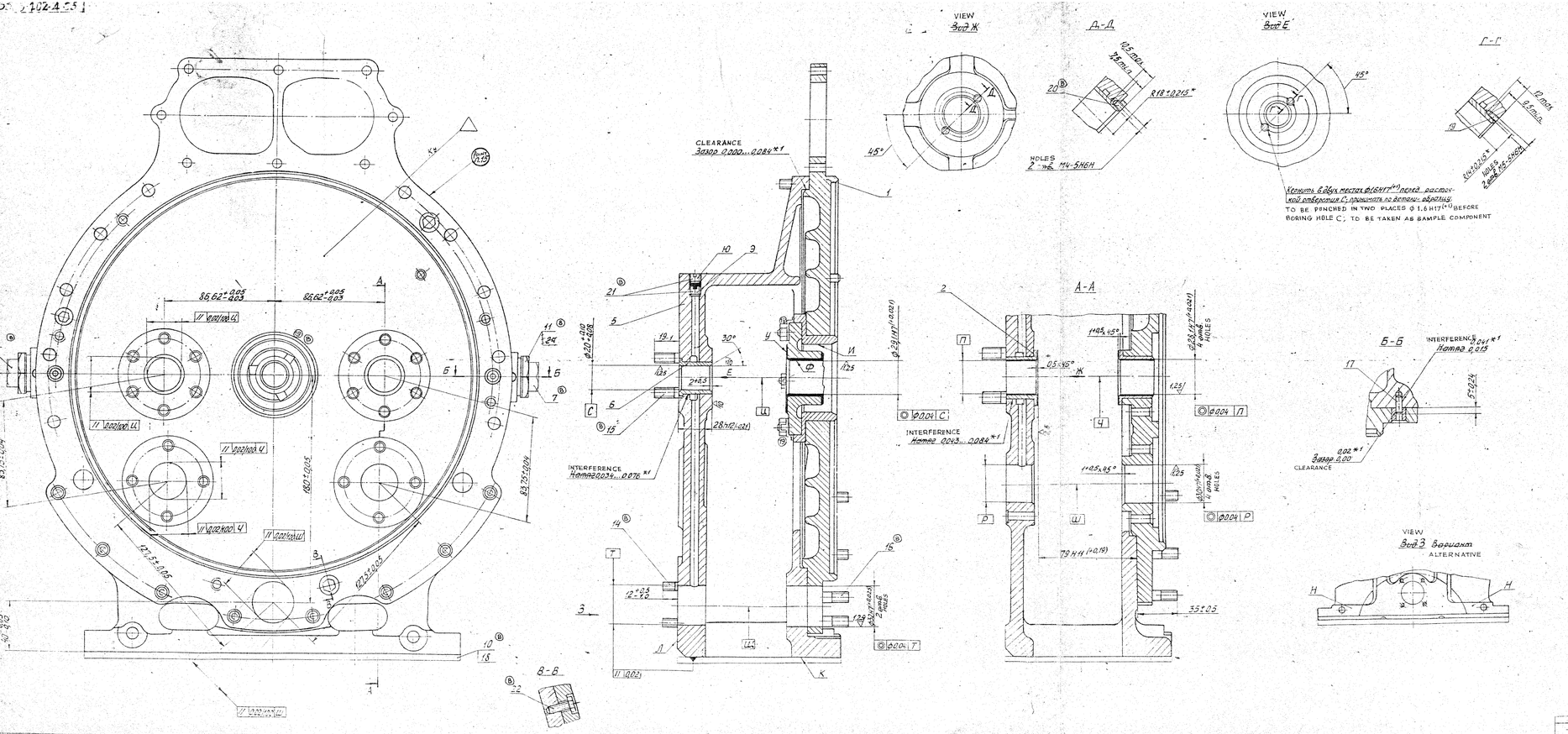

NOTE:-

1. WOOD SCREWS 19 AND 20 ARE TO BE SCREWED AS FAR AS POSSIBLE; TO BE SET ON SEALANT АН-5МА ТУ6-01-1288-84 AS PER ИЛ-652-86. PROJECTION OF WOOD SCREWS OVER SURFACE 18 NOT ALLOWED.
2. WHILE BORING HOLES, OIL DUCTS OF BODY SHOULD BE PROTECTED FROM FALLING-IN OF CHIPS. OIL DUCTS OF THE BODY SHOULD BE CLEAN.
3. RADIAL THICKNESS OF LEAD LAYER OF BRONZE; ON BUSHINGS - (0.8 ± 0.25) mm, ON ROTOR BEARING - (0.45 ± 0.25) mm; TO BE ENSURED BY TOOL.
4. TOLERANCE OF CYLINDRICITY AND OVALITY OF HOLES П, С AND Ф - 0.008 mm (SEMI-DIFFERENCE OF DIAMETERS).
5. TOLERANCE OF PERPENDICULARITY OF AXIS 'Ш' TO SURFACE 'А' (OR TO SURFACE 'Н') SHOULD BE 0.05 mm OVER 250 mm LENGTH.
6. DEVIATION FROM PERPENDICULARITY OF SURFACE 'У' TO HOLES 'Ф' AND 'С' SHOULD BE CHECKED BY BLUEING UP TO LEAD COATING; IMPRINT SHOULD NOT BE LESS THAN 70% TO BE CHECKED AFTER TIGHTENING OF NUTS SECURING THE BEARING.
7. DEVIATION FROM FLATNESS OF SURFACE 'К' SHOULD BE CHECKED BY BLUEING. IMPRINT SHOULD BE UNIFORM OVER AREA OF 1 cm². NOT LESS THAN TWO SPOTS.
8. PROJECTION OF BUSHINGS 2 AND 6 OVER SURFACE 'А' IS NOT ALLOWED.
9. OIL DUCTS ARE TO BE CHECKED FOR LEAK-PROOFNESS WITH OIL М-16(Л) GOST 6360-83 OR WITH OIL М-16ИХП-5 (М-16 Ва) GOST 2977П-85 AT A PRESSURE OF [(1±0.1) MPa ([11±1) kgf/cm²] AND TEMPERATURE 80° to 100°C FOR 2 MINUTES. LEAKAGE THROUGH THE WALLS AND PLUGS 21 ARE NOT ALLOWED.
10. PLUG 9 SHOULD BE TIGHTENED AS FAR AS POSSIBLE UP TO THE STOP. SPACE BETWEEN THE FACES OF PLUGS 9 AND 10 ARE TO BE FILLED WITH EPOXIDE GLUE No.1 BY COLD HARDENING AS PER ИЛ-110-74. QUANTITY OF GLUE BETWEEN PLUGS SHOULD BE IN SUCH A WAY THAT DURING SCREWING OF THE PLUG 10, THE GLUE SHOULD COME OUT THROUGH THE THREADS. SINKING OF PLUG 10 NOT MORE THAN 1 mm IS ALLOWED. PROJECTION IS NOT ALLOWED.
11. DURING THE ABSENCE OF OXIDATION, SURFACE Ш SHOULD BE COATED WITH PRESERVATING OIL К-17 GOST 10877-76.
12. BEFORE SETTING BUSHINGS 11 ON THREAD OVER A LENGTH NOT LESS THAN 8 MM FROM THE END FACE OF HEAD SEALANT АН-5МА ТУ6-01-1288-84 TO BE APPLIED AS PER ИЛ-653-86
13. BASE SURFACES 'К' AND 'А' (OR 'Н') ARE TO BE PROTECTED FROM NICKS.
14. BEFORE PRESSING THE BUSHINGS THE BODY SHOULD BE HEATED TO A TEMPERATURE OF 80° to 100°C; TO BE PRESSED AS FAR AS POSSIBLE.
15. PAIR Nos OF COVER AND BODY ARE TO BE MARKED BY PUNCHING.
16. FOR ASSEMBLY UNITS IN TROPICAL MAKE, COMPONENTS AND ASSEMBLY UNIT, HAVING CONVENTIONAL DESIGNATION 'ТК' IN THE PARTS LIST OF GIVEN DRAWING IN COLUMN 'REMARKS' SHOULD HAVE TROPICAL DESIGN AS SPECIFIED IN THE DRAWINGS OF COMPONENTS AND ASSEMBLY UNITS.
17. INSTEAD OF PLUG 7, COMPONENT 186-038 MAY BE SET WITH BOUGHT OUT UNIT НТП 46.
18. * TO BE ENSURED BY TOOL.
19. *1 DIMENSIONS FOR REFERENCE.
20. TO BE SUPPLIED WITH CERTIFICATES.
21. STUDS 16 SHOULD BE SET ON SEALANT АН-5МА ТУ6-01-1288-84 AS PER ИЛ-652-86.
22. FOR ASSEMBLY UNIT IN TROPICALIZED MAKE THE COMPONENTS AND ASSEMBLY UNIT AVAILABLE IN PARTS LIST OF GIVEN DRAWING IN COLUMN "REMARKS" CONVENTIONAL DESIGNATION "ТК" SHOULD HAVE TROPICALIZED MAKE AS SPECIFIED IN THE DRAWINGS FOR COMPONENTS AND ASSEMBLY UNITS.

03
129

PILOT SAMPLES WILL BE APPROVED BY A.H.S.P. BEFORE BULK PRODUCTION

1:1	TO BE STAMPED OR MARKED WHERE INDICATED THUS R
1:1	LETTERS
ALL SHARP EDGES TO BE REMOVED UNLESS OTHERWISE STATED	
ALL MACHINED CORNERS TO HAVE R OUT. SIDE R INSIDE R	
SCRAT CHAMFERS ARE 0.5 MM	

B	25.4.95	AUTHY. BY: 86-1193 & 86-1259			
ISSUE	DATE	NATURE OF AMENDMENTS			

DEN		MATERIAL —	ISSUED ON —
CHD			
TEC			
APPD		CONTROLLER OF QUALITY ASSURANCE (HEAVY VEHICLES) A.V.A.D.I.	
DATE	28.4.95		
SCALE	1:1		
DIMENSIONS IN mm TOLERANCE ON DIMENSIONS UNLESS OTHERWISE STATED ±0.2 ±0.1 ±0		TITLE BODY OF SUPER-CHARGER ASSEMBLY DRAWING	
		D S CAT NUMBER	DRAWING NUMBER СБ 3338-4-01-10

USED ON	ITEM	DRAWING NUMBER	D S CAT NUMBER	DESCRIPTION	No. OFF	REMARKS
		C6 3338-403-2		COVER OF SUPER-		
		AND ITEM LIST		CHARGER ASSY		
	1	C6 3338-428		COVER BUSHIHG	2	
		& ITEM LIST				
	4	3338-170		SETTING BUSH	2	
	5	3338-421-1		COVER OF SUPER CHARGER	1	A2 X 4 TROPICAL (TH) MAKE
	6	3338-466		BEARING	1	
	8	3338-474		HOLDER	1	A4 X 3
	11	350-05		STUD M6 X 35	2	
	12	350-16 A		STUD M6 X 32	5	
	13	351-06		NUT	5	
	14	352-26		PIN 6h8 X 14	1	
	15	353-11		LOCK WASHER 7	5	
	16	356-57		LOCK WOOD SCREW	4	

ISSUE	DATE	NATURE OF AMENDMENTS	ISSUE	DATE	NATURE OF AMENDMENTS
A	8 5-96	AUTHY NOTN No BK 87-126			

DRN	Alu	CONTROLLERATE OF QUALITY ASSURANCE (HEAVY VEHICLES) AVADI
CHD	[illegible]	TITLE: COVER OF SUPER-CHARGER ASSY
TCD	[illegible]	
APPD	[illegible]	
DATE	28-4-95	SHT No 1 OF 1 — D S CAT NUMBER — ITEM LIST FOR C6 3338-403-2

DRAWING NUMBER
СБ 3338-403-2

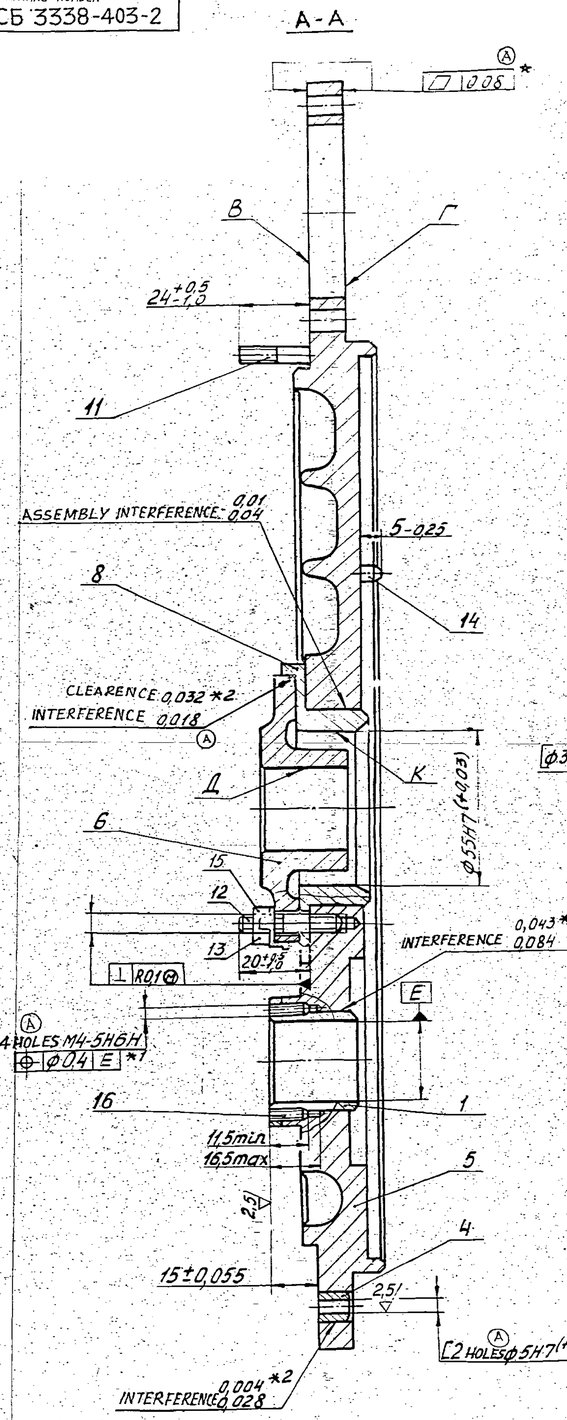

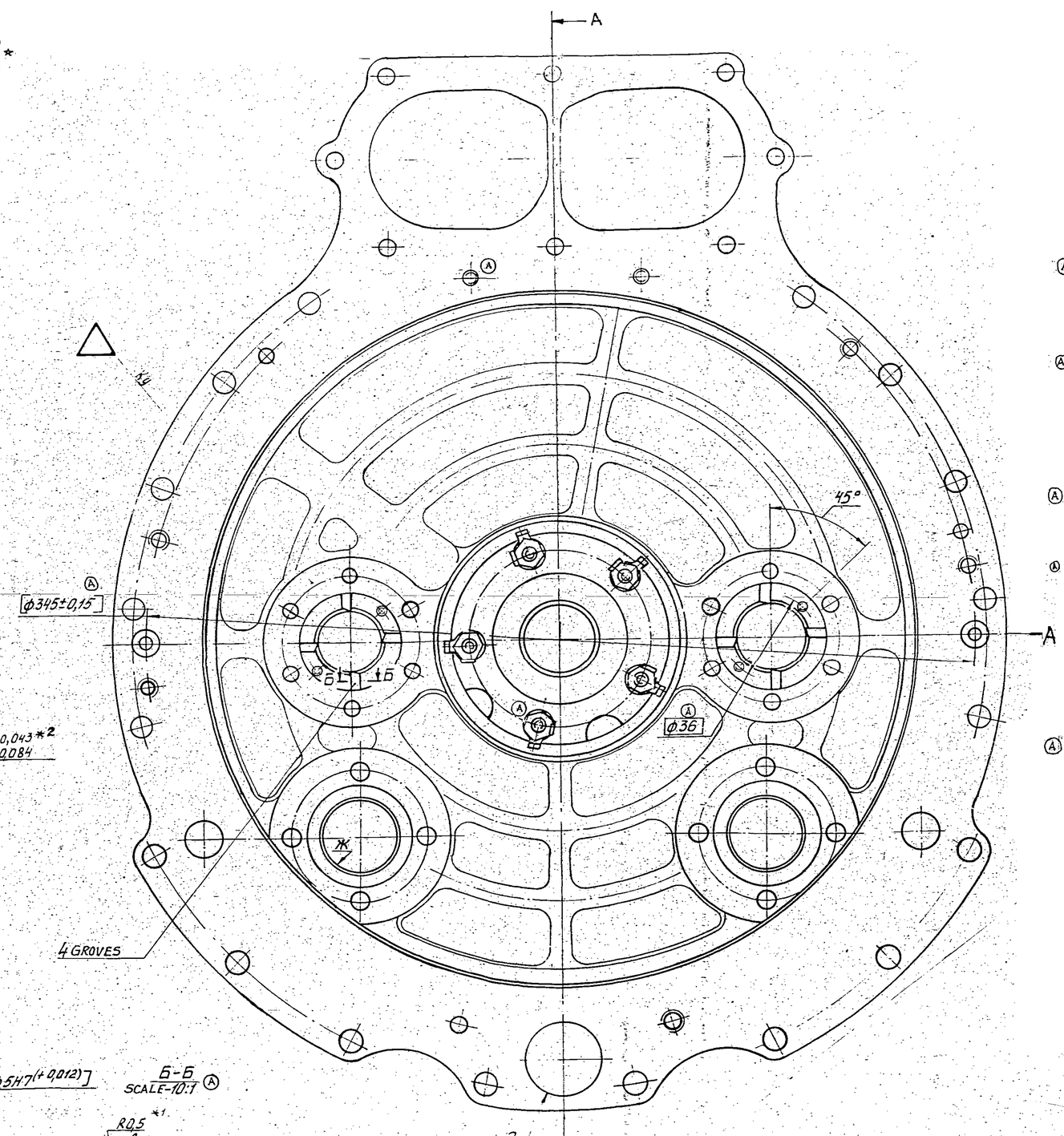

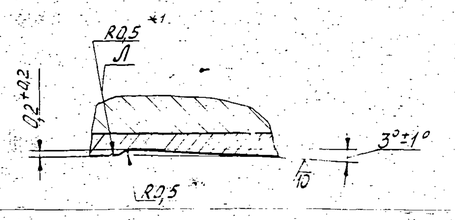

1. BEFORE PRESSING BUSHES AND HOLDER THE COVER SHOULD BE HEATED TO TEMPERATURE (80 to 100°C).
2. LOCK WOOD SCREWS SHOULD BE SCREWED AS FAR AS POSSIBLE ; SHOULD BE SECURED WITH SEALANT. PROJECTION OF WOOD SCREWS OVER SURFACE IS NOT ALLOWED; SINKING IS ALLOWED NOT EXCEEDING 0.5mm.
3. (A) MACHINING AS PER DIMENSIONS IN SQUARE BRACKETS SHOULD BE CARRIED OUT TO-GE-HER WITH COMPONENT 3338-420-3 OR ASPER MATCHING JIG. COMPONENTS ARE TO BE USED COMBINEDLY.
4. (A) PROJECTION OF BUSH 4 OVER SURFACES B AND Г IS NOT ALLOWED.
5. WHILE CHANGING BUSHES 1, HOLES FOR WOOD SCREWS ARE TO BE POSITIONED APPROXIMATELY THROUGH 90° FROM THE INITIAL POSITION.
6. MACHINING OF HOLES Д, E, ж, 3 - AFTER ASSEMBLY.
7. (A) TOLERANCE ON OVALITY OF HOLE K-0.01mm (SEMI DIFFERENCE OF DIAMETERS); ABSENCE OF OXIDATION IS ALLOWED.
8. (A) INSTEAD OF RADIUS Л CHAMFER 0.5x45° MAY BE MADE.
9. FOR ASSEMBLY UNITS IN TROPICAL MAKE, COMPONENT HAVING CONVENTIONAL DESIGNATION 'TU' IN THE PARTS LIST OF GIVEN DRAWING IN COLUMN "REMARKS", SHOULD HAVE TROPICAL MAKE AS SPECIFIED IN THE COMPONENT DRAWING.
10. (A) ж TO BE CHECKED UNDER THIS EFFECT OF UNIFORMLY DISTRIBUTED WEIGHT OF LOAD (10±0.5)kg.
11. *1 TO BE ENSURED BY TOOL.
12. *2 DIMENSIONS FOR REFERENCE.

PILOT SAMPLE SHOULD BE APPROVED BY A H S P BEFORE BULK PRODUCTION.

EST. WT. 5.5 Kg	TO BE STAMPED OR MARKED WHERE INDICATED THUS # (LETTERS)
ALL SHARP EDGES AND CORNERS TO BE REMOVED UNLESS OTERWISE STATED MACHINED CORNERS TO HAVE R OUTSIDE R INSIDE EQUIVALENT CHAMFERS ARE PERMISSIBLE.	

ISSUE	DATE	NATURE OF AMENDMENTS
A	25.3.96	AUTHY. NOTN. No. BK 87-126.

DRN	m. Chakraborty
CHD	[illegible]
TCD	m. Chakraborty
APPD	[illegible]
DATE	25-03-96
SCALE	1:1
DIMENSIONS IN mm	
TOLERANCE ON DIMNS UNLESS OTHERWISE STATED IS 2102 - 69	
ALL THREADS TO CONFORM TO	

MATERIAL :-

USED ON :- СБ 3338-402-4

CONTROLLERATE OF QUALITY ASSURANCE (HEAVY VEHICLES) AVADI

TITLE: COVER SUPERCHARGER ASSY.

D S CAT NUMBER

DRAWING NUMBER СБ 3338-403-2

SIZE A1

3338-170 ЕСКД

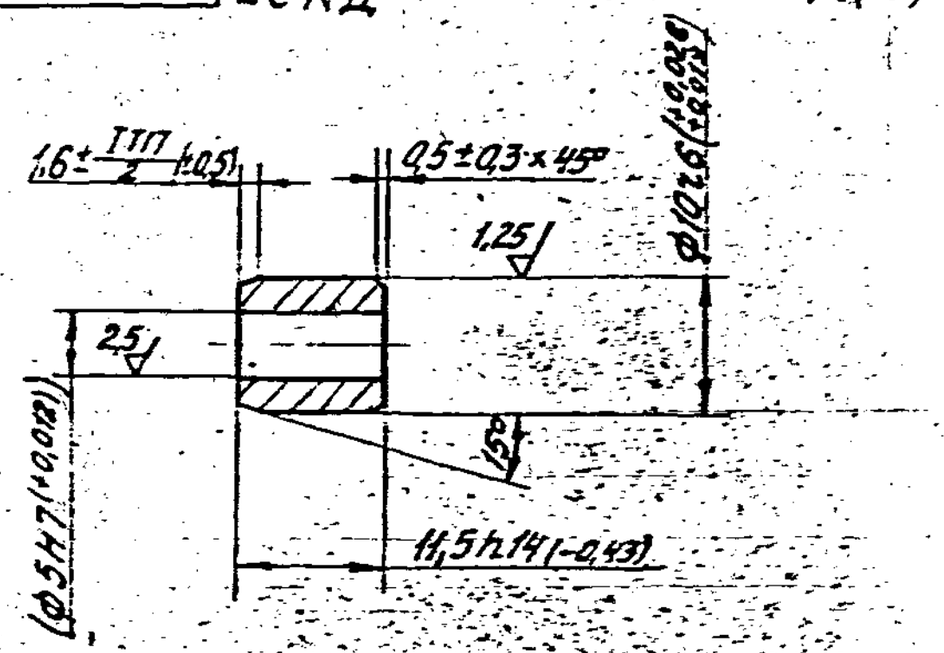

1. Группа контроля IV по ТТ-11.
Ⓐ 2. HRC 28...35 ~~HRC 26...33~~.
3. Размер в скобках – после сборки.
4. Покрытие Хим. Окс. прм.

1. INSPECTION GROUP IV TT-11.
Ⓐ 2. HRC 28...35 ~~26-33~~.
3. DIMENSION IN BRACKETS SHOULD BE OBTAINED OTHER ASSEMBLY.
4. COATING: CHEMICAL OXIDIZING, OIL FINISHING.

PILOT SAMPLE SHOULD BE APPROVED BY A H S P BEFORE BULK PRODUCTION

		EST. MASS 0.0045 Kg	TO BE STAMPED OR MARKED WHERE INDICATED THUS # (LETTERS)
		ALL SHARP EDGES AND CORNERS TO BE REMOVED UNLESS OTHERWISE STATED MACHINED CORNERS TO HAVE R OUTSIDE R INSIDE EQUIVALENT CHAMFERS ARE PERMISSIBLE	
A	7.7.89	AUTHY. BK 85-807	
ISSUE	DATE	NATURE OF AMENDMENTS	
DRN		SCALE :- 2 : 1	MATERIAL :- STEEL 38 x A GOST 4543-71 / USED ON :- CB 3338-403-2
CHD		DIMENSIONS IN mm	CONTROLLERATE OF INSPECTION (HEAVY VEHICLES) AVADI
TCD		TOLERANCE ON DIMNS UNLESS OTHERWISE STATED	TITLE :- SETTING BUSH
APPD		ALL THREADS CONFORM TO	D S CAT NUMBER / DRAWING NUMBER 3338-170
DATE	15/8/		

EXPLANATORY NOTE:-

MATERIAL QUOTED :- STEEL 38XA GOST 4543-71.

CHROMIUM STEEL GRADE = 38 XA , A - INDICATES HIGH QUALITY STEEL.

CHEMICAL COMPOSITION :- %

CONTENT OF ELEMENTS							
C	Si	Mn	Cr	P	S	Cu	Ni
			MAXIMUM				
0·35-0·42	0·17-0·37	0·50-0·80	0·80-1·10	0·025	0·025	0·30	0·30

MECHANICAL PROPERTIES :-

1. HEAT TREATMENT

a) HARDENING OR NORMALIZING TEMPERATURE °C = 860
COOLING MEDIUM = OIL

b) TEMPERING TEMPERATURE °C = 550
COOLING MEDIUM = WATER OR OIL

2. YIELD POINT kgf/mm² (MIN) = 80
3. ULTIMATE STRENGTH kgf/mm² (MIN) = 95
4. RELATIVE ELONGATION % (MIN) = 12
5. RELATIVE REDUCTION ALONG CROSS SECTION % = 50 (MIN)
6. IMPACT STRENGTH kgf.m/cm² (MIN) = 9

3338-421-1

ЕСКД

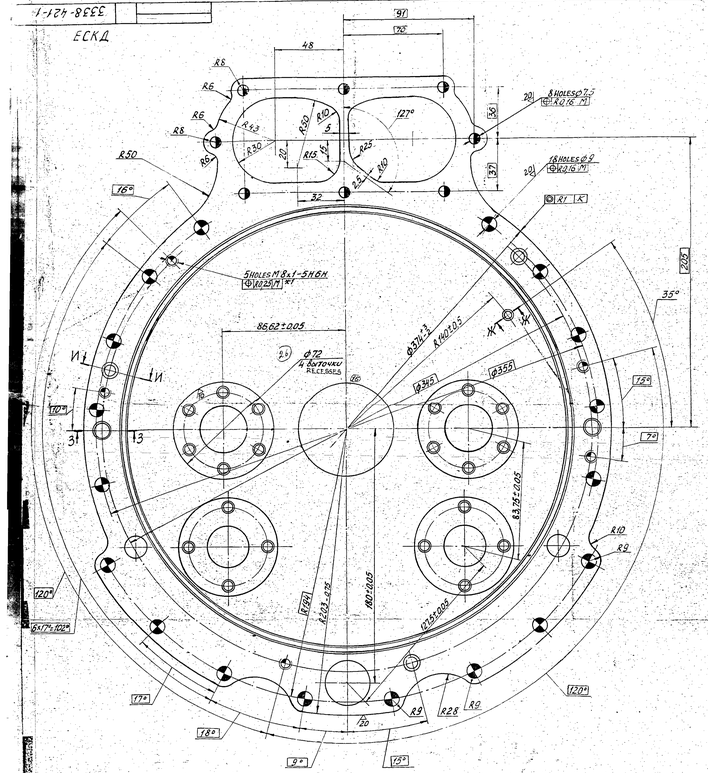

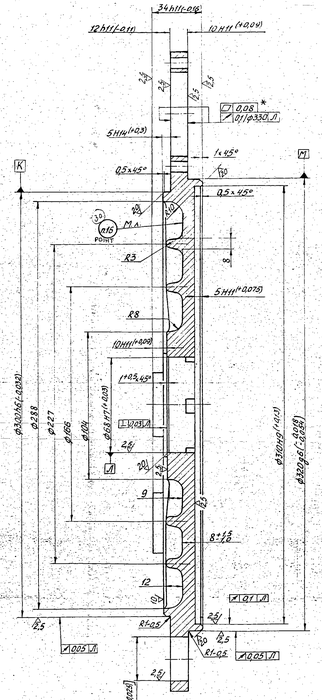

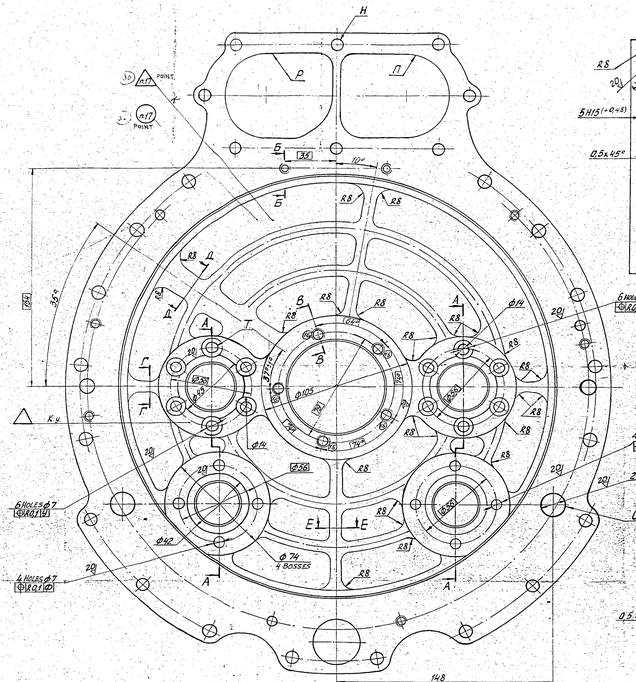

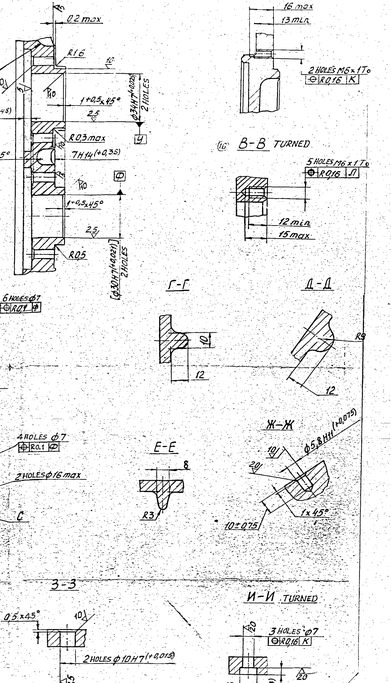

1. REQUIREMENTS FOR CASTING SHOULD BE AS PER TTM 42-77.
2. UNSPECIFIED CASTING RADII - 5mm.
3. DRAFT SHOULD NOT EXCEED 2°.
4. LOCAL DEVIATIONS OF WALL THICKNESS ±1.5mm.
5. COATING OF UNMACHINED SURFACES FROM THE SIDE OF BOSSES BAKELITE VARNISH ЛБС-1 AS PER ШЛ-665-86.
6. IN TROPICAL MAKE COATING SHOULD BE BAKELITE VARNISH ЛБС-1 AS PER ШЛ-665-86.
7. UNSPECIFIED LIMIT DEVIATIONS OF DIMENSIONS OBTAINED BY CASTING UP TO 100mm - $^{+0.5}_{-1.5}$ mm, ABOVE 100mm - $^{+0.8}_{-1.8}$ mm, RADII UP TO 10mm - $^{+1.5}_{-1.5}$ mm, ABOVE 10mm UP TO 50mm - ±1.5mm ABOVE 50mm - ±2.0mm, OBTAINED BY REMOVING THE LAYER OF METAL - H14, h14.
8. MACHINING AS PER DIMENSIONS IN SQUARE BRACKET SHOULD BE CARRIED OUT TOGETHER WITH COMPONENT 5338-420-5.
9. TECHNICAL REQUIREMENTS FOR THREAD - AS PER STANDARD 82021-00.
10. TOLERANCE ON OVALITY AND TAPER OF SURFACE Д - 0.01mm (SEMI DIFFERENCE OF DIAMETERS).
11. CONTOURS П AND Р SHOULD BE CHECKED AND FILED AS PER TEMPLATE TO BE ORIENTED AS PER HOLES Н (DATUM).
12. HOLES С NEED NOT BE MADE.
13. HOLES Т SHOULD BE POSITIONED OPTIONALLY.
14. * TO BE CHECKED UNDER UNIFORMLY DISTRIBUTED LOAD OF NOT MORE THAN 10kg.
15. *¹ TO BE ENSURED BY TOOL.
16. MATERIAL GRADE SHOULD BE MARKED AS PER GOST 2171-79, TYPE No 8 TO 10. GOST 2950-62.
17. ACCEPTANCE OF BLANK SHOULD BE MARKED AND HEAT No. SHOULD BE MARKED BY PUNCHING.

PROT. SAMPLE SHOULD BE APPROVED BY A.H.S.P. BEFORE BULK PRODUCTION.

EST. WT. 4.1kg

TO BE STAMPED OR MARKED WHERE INDICATED THUS ⊕

ALL SHARP EDGES AND CORNERS TO OTHERWISE S...1470 "MACHINED CORNER" OR INDICATED ⊕ ...ELECT. CHAMFER

			UV	[illegible]	MATERIAL – AЛ9, GOST 2685-75.
			[illegible]	[illegible]	USED ON – CB 5338-403-2
			[illegible]	[illegible]	
			[illegible]	[illegible]	
			[illegible]	[illegible]	CONTROLLERATE OF QUALITY ASSURANCE (HEAVY VEHICLES) A.V.A.D.I.
			[illegible]	30-05-88	
			[illegible]	[illegible]	
			DIMENSIONS IN mm		
			TOLERANCE ON FINISH		
			ALL DIMENSIONS		
			STATED IN 2002-41		
A	30-6-90	AUTHY. NOTN. No BKB-472.	ALL THREADS TO		

TITLE: SUPERCHARGER COVER

DRAWING NUMBER: 5338-421-1

3338-466

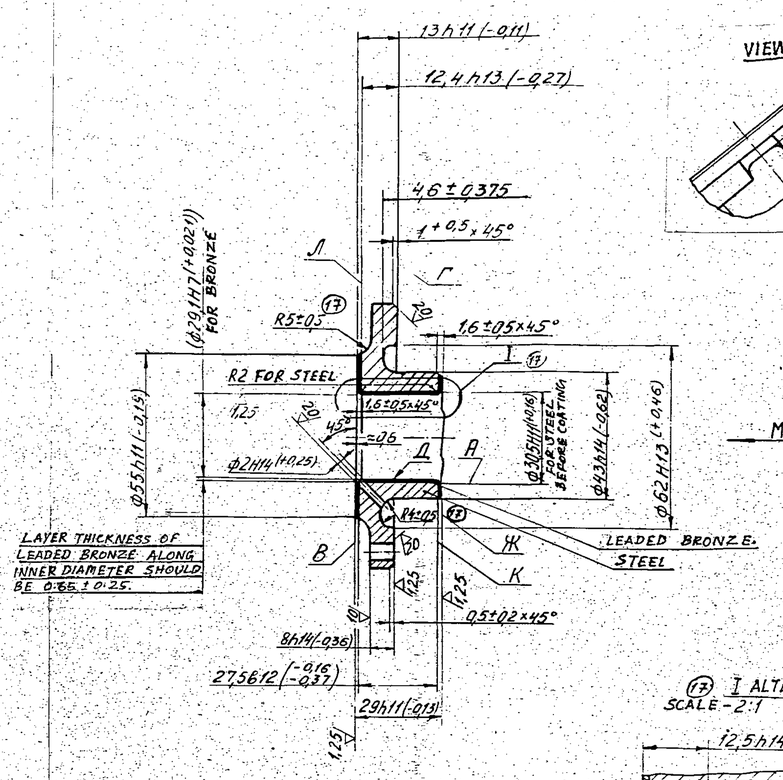

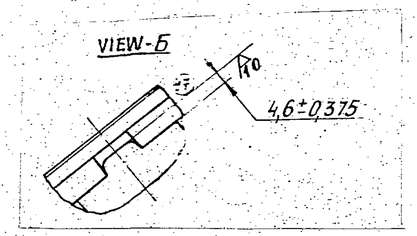

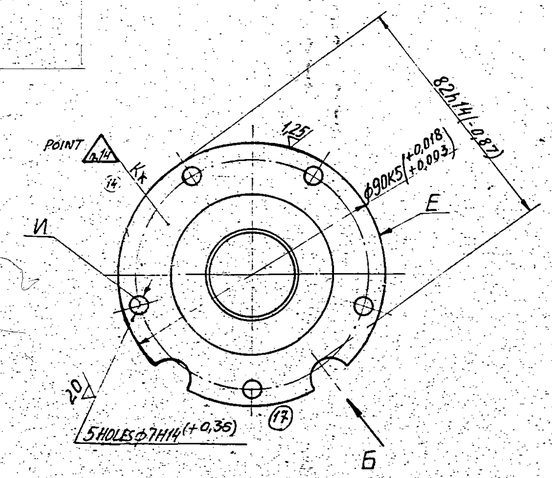

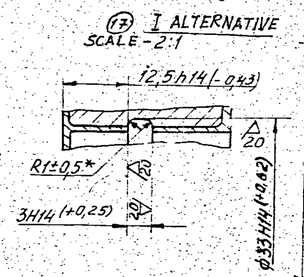

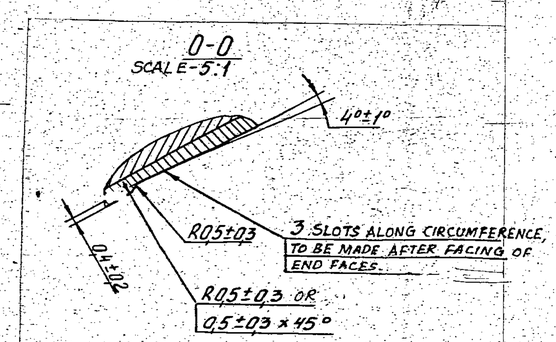

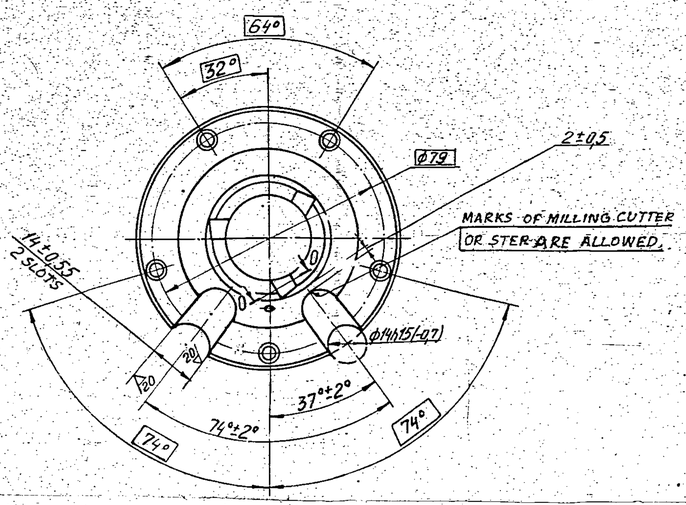

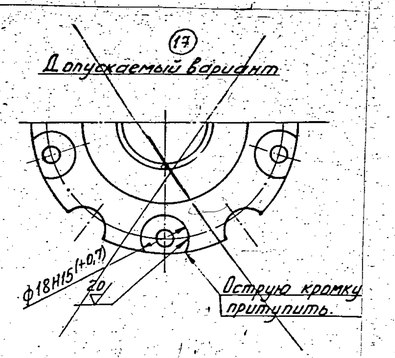

1. REQUIREMENTS FOR MATERIAL AND COATING: LEADED BRONZE AS PER TTM 43-87.
2. RECOATING OF BEARING BY LEADED BRONZE WITH PERMISSIBLE DEVIATION FOR COATING ALONG DIAMETER IS ALLOWED UPTO 1.5mm AND ALONG END FACES UPTO 0.3mm ABOVE DIMENSIONS SPECIFIED IN THE DRAWING.
3. RUN-OUT OF SURFACE 'E' RELATIVE TO SURFACE 'A' SHOULD NOT EXCEED 0.05mm (BEFORE COATING LEADED BRONZE).
4. NON-SQUARENESS OF END FACES 'Л' AND 'K' TO SURFACE 'A' ON EDGE POINTS OF DIAMETER SHOULD NOT EXCEED 0.1mm (BEFORE COATING LEADED BRONZE).
5. NON-SQUARENESS OF END FACE 'Г' TO SURFACE 'K' ON END POINTS OF DIAMETER SHOULD NOT EXCEED 0.015mm.
6. NON-SQUARENESS OF END FACES 'B' AND 'Ж' TO SURFACE 'Д' ON END POINTS OF DIAMETER SHOULD NOT EXCEED 0.02mm.
7. —
8. EXTERNAL SURFACES OF BRONZE 'Д', 'Ж' AND 'B' SHOULD BE COATED WITH LEAD LAYER OF THICKNESS 0.002 TO 0.005mm.
9. LEAD COATING SHOULD BE CARRIED OUT AFTER FINAL MACHINING AND CHECKING IN ASSEMBLY.
10. COATING BY LEAD OF OTHER SURFACES EXCLUDING SURFACES 'Г' AND 'E' ARE ALLOWED.
11. END FACE 'Г' SHOULD BE CHECKED BY BLUEING, THE IMPRINT SHOULD COVER NOT LESS THAN 60% OF THE SURFACE.
12. SHIFT OF AXES OF HOLE 'И' FROM NOMINAL POSITION SHOULD NOT EXCEED 0.2mm, DATUM SURFACE 'E' (M.M.C).
13. SHARP EDGES ARE TO BE BLUNTED.
14. TO BE STAMPED BY ETCHING OR BY ELECTROCHEMICAL METHOD.
15. ALTERNATE MATERIAL: STEEL 15, GOST 1050-74. Бр С30 GOST 493-79.
16. DIMENSIONS IN BRACKET - AFTER ASSEMBLY.
17. * DIMENSIONS ARE TO BE ENSURED BY TOOL.

~~EXPLANATORY NOTE~~

~~MATERI~~

PILOT SAMPLE SHOULD BE APPROVED BY A H S P BEFORE BULK PRODUCTION.

EST. WT. 0.540 Kg	TO BE STAMPED OR MARKED WHERE INDICATED THUS # LETTERS 1

ALL SHARP EDGES AND CORNERS TO BE REMOVED [illegible] OTERWISE STATED MACHIN[illegible] CORNERS TO HAVE R [illegible] SIDE R. INSIDE EQUIVAL[illegible] CHAM[illegible] ARE PERMISSIBLE.

ISSUE	DATE	NATURE OF AMENDMENTS
B	27-4-96	AUTHY. NOTU. BK-87-69, BK. E4-2221DK.82-321

DRN	
CHD	
TCD	
APPD	
DATE	11-5-96
SCALE	1:1
DIMENSIONS IN mm	
TOLERANCE ON DIMNS UNLESS OTHERWISE STATED IS 2102 - 69	
ALL THREADS TO CONFORM TO	

MATERIAL: STEEL 15, GOST 1050-74. Бр. OCT-22 OST 190054-72. FORGING

USED ON: СБ 3338-403-2

CONTROLLERATE OF QUALITY ASSURANCE (HEAVY VEHICLES) AVADI

TITLE: BEARING

D S CAT NUMBER

DRAWING NUMBER 3338-466

DRG. INDIANISED VIDE BK. NO.

DRAWING NUMBER
3338-474

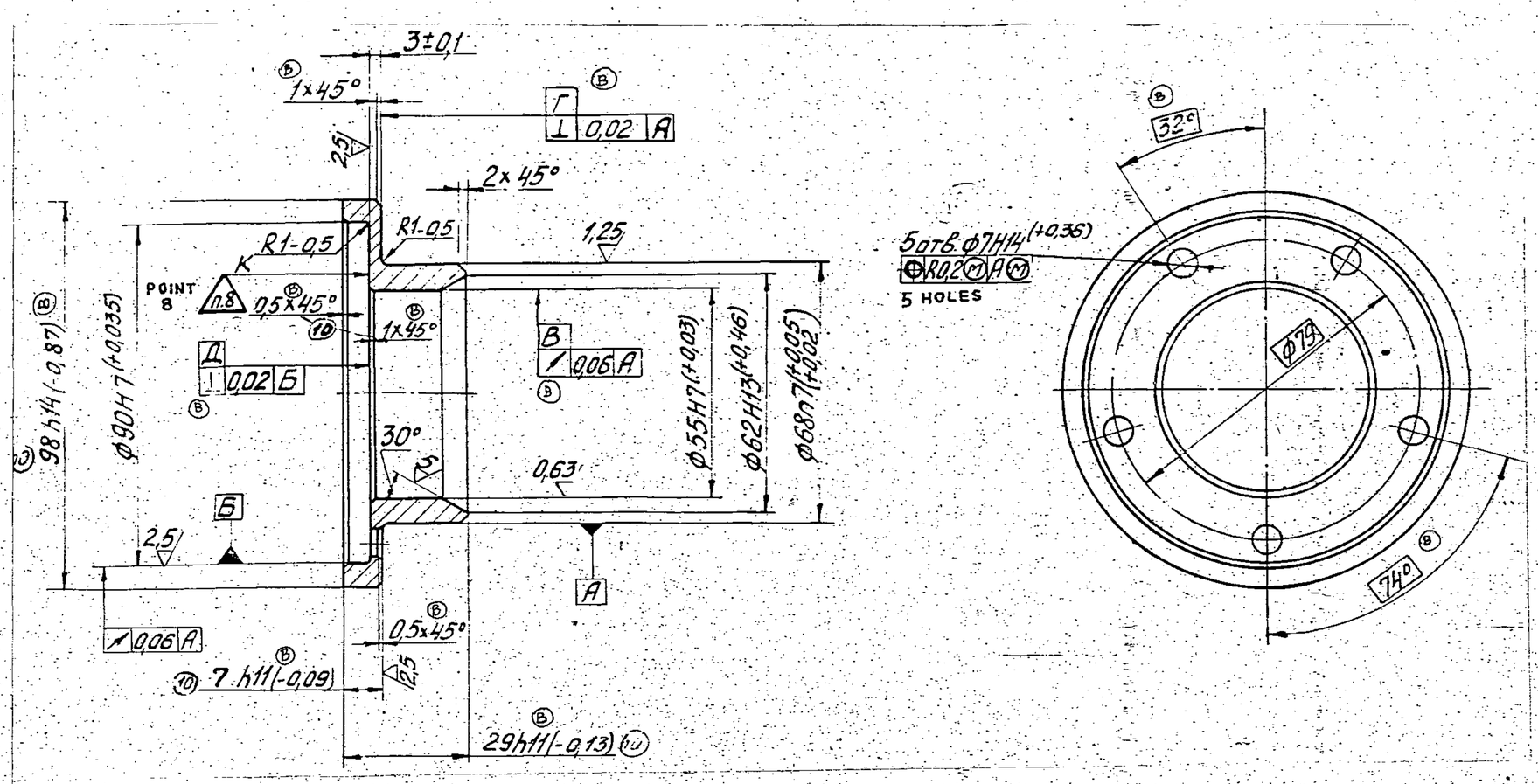

1. INSPECTION GROUP III AS PER TT-11.
2. SURFACE B SHOULD BE CASE HARDENED h 0.7 TO 1.1 mm; HRC$_э$ ≥ 57 TO BE CABONISED ALL AROUND.
3. HRC$_э$ 28 TO 42 FOR NON-CASE HARDENED SURFACES. RANDOM CHECKING FROM THE BATCH IS ALLOWED.
4. DEVIATION FROM FLATNESS OF SURFACE SHOULD BE CHECKED "BY BLUEING". BLUEING IMPRINT ON SURFACE Г – MIN 80 % ON SURFACE Д – 70 % MIN; BETWEEN HOLES ABSENCE OF BLUE IS ALLOWED.
5. TOLERANCE ON OVALITY OF SURFACE B SHOULD BE 0.005 mm SURFACES A – 0.01 mm (SEMI-DIFFERENCE OF DIAMETERS)
6. COMPONENT SHOULD BE CHECKED ON MAGNETIC FIELD FLAW DETECTOR AS PER TT UB-17 EDITION-6
7. COATING: CHEMICAL OXIDATION AND OIL FINISHING.
8. (B) TO BE STAMPED BY ELECTRO CHEMICAL METHOD.
9. (B) ALTERNATE MATERIAL: STEEL 12 X H 3A GOST 4543-71 FORGING.

PILOT SAMPLE SHOULD BE APPROVED BY A H S P BEFORE BULK PRODUCTION.

EST. WT.	TO BE STAMPED OR MARKED WHERE INDICATED THUS # (LETTERS)
0.385	

ALL SHARP EDGES AND CORNERS TO BE REMOVED UNLESS OTHERWISE STATED MACHINED CORNERS TO HAVE R OUT-SIDE R INSIDE EQUIVALENT CHAMFERS ARE PERMISSIBLE.

ISSUE	DATE	NATURE OF AMENDMENTS
B	10-5-96	AUTHY B.K.-87-69

DRN	
CHD	
TCD	Alice J.
APPD	
DATE	10-5-96
SCALE :-	1 : 1
DIMENSIONS IN mm	
TOLERANCE ON DIMNS UNLESS OTHERWISE STATED IS 2102 – 69	
ALL THREADS TO CONFORM TO	

MATERIAL :- STEEL 12 X H 3A TY 14-1-381-72 FORGING

USED ON :- CB 3338-403-2

CONTROLLERATE OF QUALITY ASSURANCE (HEAVY VEHICLES) A V A D I

TITLE : HOLDER

D S CAT NUMBER

DRAWING NUMBER 3338-474

SIZE A2

DRAWING NUMBER
350 - 05

SHEET No. 1 OF 1

Rz 80 (✓)

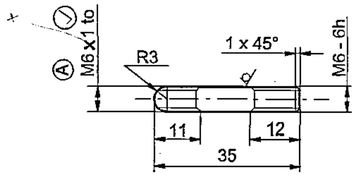

1. DELETED.
2. TECHNICAL REQUIREMENTS FOR THREADS AS PER STANDARD 82021-00.
3. DIMENSIONS WITH UNSPECIFIED TOLERANCES AND THE REST OF THE TECHNICAL REQUIREMENTS - AS PER STANDARD 82052 - 00.
4. COATING : CADMIUM 3. CHROMATIZING AS PER ЦЦЛ-104 WITH SUBSEQUENT ELIMINATION OF HYDROZEN EMBRITTLEMENT.
5. THE THREAD MAY BE MADE BY ROLLING WITH THE DIAMETER OF UNTHREADED PORTION WITH THE PITCH DIAMETER OF THREAD.
6. MECHANICAL DAMAGES OF THE CADMIUM COATING SUCH AS SCRATCHES, NICKS AND DENTS ARE ALLOWED ON ASSEMBLY UNITS, PROVIDED THE STEEL IS NOT EXPOSED.
7. ALTERNATE MATERIAL : STEEL, GRADES 40 AND 50 GOST 1050-74.

(B) 8. HARDNESS :- 27 - 32 HRC.

EXPLANATORY NOTE :-

MATERIAL QUOTED : - ROUND BAR $\frac{\text{GOST 7417-75}}{\text{45 GOST 1051-73}}$

ALTERNATE MATERIAL QUOTED : - 40 , 50 GOST 1050-74
PERTAINS TO SIZED COLD ROLLED OR COLD DRAWN STEEL WITH ROUND SECTION

40 , 45 AND 50 ARE GRADES OF STEEL GOST 1051-73

CHEMICAL COMPOSITION :

GRADE OF STEEL	CONTENT OF ELEMENTS IN %							
	C	Si	Mn	Cr	P	Cu	S	Ni
				MAXIMUM				
40	0.37 - 0.45	0.17- 0.37	0.50 - 0.80	0.25	0.035	0.25	0.04	0.25
45	0.42 - 0.50	0.17- 0.37	0.50 - 0.80	0.25	0.035	0.25	0.04	0.25
50	0.47 - 0.55	0.17- 0.37	0.50 - 0.80	0.25	0.035	0.25	0.04	0.25

MECHANICAL PROPERTIES :

GRADE OF STEEL	TENSILE STRENGTH Kgf /mm^2 (min)	YIELD POINT Kgf / mm^2 (min)	ELONGATION % (min)	REDUCTION IN AREA % (min)	IMPACT STRENGTH Kgf / mm^2
40	58	34	19	45	6
45	61	36	16	40	5
50	64	38	14	40	4

(A) 8. REPAIR SIZE DIMENSIONS ARE ADDED WHERE INDICATED THUS (✓) BASED ON OVER HAUL SPECIFICATION PART III REPAIR DRAWINGS.

SL.No.	R	REMARKS
1	M8 x 1.25 TO	ALL OTHER CONDITIONS AS PER STD. DRG.
2	P C D = 7.188 $^{+0.152}_{+0.082}$	

(B) * ALT. MATERIAL :- STEEL 709 M40 (EN-19) TO BS : 970 PT. - I -1983.

(C) EQUIVALENT MATERIAL STEEL
45C8 TO IS:1570

DRG. RE- INDIANISED BASED ON 350-05 ISSUE 'B'
COMMON TO V-92S2 ENGINE

(B. JAYAVELU), JTO(D)
31-01-2008

PILOT SAMPLE SHOULD BE APPROVED BY A H S P BEFORE BULK PRODUCTION.

EST. WT. (Kg)	TO BE STAMPED OR MARKED WHERE INDICATED THUS # (LETTERS)
0.007	

ALL SHARP EDGES AND CORNERS TO BE REMOVED UNLESS OTHERWISE STATED MACHINED CORNERS TO HAVE R OUT-SIDE R INSIDE EQUIVALENT CHAMFERS ARE PERMISSIBLE.

ISSUE	DATE	NATURE OF AMENDMENTS
C	12-8-10	4th Alt. Comm. Meeting Minutes Point No.11 Dt: 26-10-09
B	12.01.08	AUTHY:-MIN.OF ALT. COM.MEET POINT No. - 2.12 Dt. 07.02.07
A	02.09.95	REPAIR SIZES ADDED

DRN	Sd/=
CHD	Sd/=
APPD	Sd/=
DATE	
SCALE:- 1 : 1	
DIMENSIONS IN mm	
TOLERANCE ON DIMNS UNLESS OTHERWISE STATED IS : 2102 - 69	
ALL THREADS TO CONFORM TO	

MATERIAL :- ROUND BAR $\frac{\text{GOST 7417 - 75 *}}{\text{45 GOST 1051-73}}$

USED ON :- Cb 3308-91
Cb 402 - 94 - 1
Cb 3338 - 403 - 2

CONTROLLERATE OF QUALITY ASSURANCE (HEAVY VEHICLES)
AVADI

TITLE :-
STUD M6 x 35

D S CAT NUMBER

DRAWING NUMBER
350 - 05

F - 11

SIZE A2

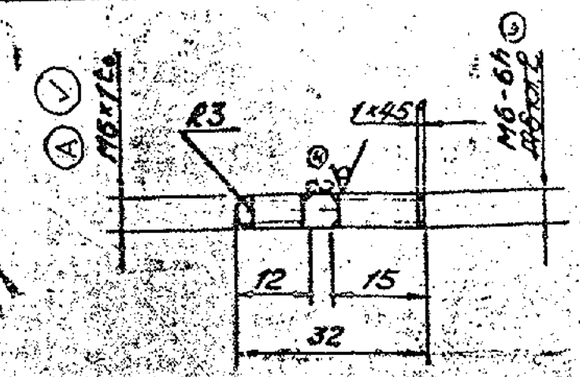

1. Inspection group IV TT-11.
2. HRC$_3$ 28 ---- 35
3. Technical requirements for threads as per Standard 82021-00.
4. Dimensions with unspecified tolerances and the rest of the requirements - as per Standard 82062-00.
5. Coating :- Cadmium 3, Chromatizing as per ИЛН-104 with elimination of Hydrogen embrittlement.
6. The thread may be made by rolling with the diameter of unthreaded portion within the Pitch diameter of thread.
7. Mechanical damages of Cadmium Coating such as scratches, nicks and dents are allowed on assembly units. Provided the steel is not exposed.

8. EXPLANATORY NOTE :-

MATERIAL QUOTED :- ROUND BAR GOST 7417-75 / 38XA GOST 1051-73

ROUND BAR GOST 7417-75 AS PER REQUIRED DIAMETER.
38XA = GRADE OF STEEL.

CHEMICAL COMPOSITION :-

CONTENT OF ELEMENTS %							
C	Si	Mn	Cr	Cu	Ni	P	S
				MAXIMUM			
0·35-0·42	0·17-0·37	0·50-0·80	0·80-1·10	0·25	0·30	0·025	0·025

MECHANICAL PROPERTIES :-

ULTIMATE RUPTURE STRENGTH	Kgf/mm²	(MIN)	= 95.
YIELD POINT	Kgf/mm²	(MIN)	= 80.
% RELATIVE ELONGATION		(MIN)	= 12.
RELATIVE REDUCTION IN AREA %		(MIN)	= 50.

(A) 9. REPAIR SIZE DIMENSIONS ARE ADDED WHERE INDICATED THUS ✓, BASED ON OVERHAUL SPECIFICATIONS PART III REPAIR DRAWINGS.

Sl.No.	R	REMARKS
1.	M8 X 1·25 to	ALL OTHER CONDITIONS AS PER STD. DRG.
2.	P.C.D = 7.188 $^{+0.152}_{+0.082}$	

(C) Alt.Material: STEEL 709M40 (EN-19) TO BS-970 Pt-I-1983

* PILOT SAMPLE SHOULD BE APPROVED BY A H S P BEFORE BULK PRODUCTION

ISSUE	DATE	NATURE OF AMENDMENTS
E	28.02.16	USED ON NUMBER DELETED
D	24.02.16	USED ON NUMBER ADDED
C	18.5.09	Authy: 3rd Alt. Comm. Min. Pt.2 Dated 27-02-09
B	25.8.08	USED ON NUMBER ADDED
A	7-9-95	REPAIR SIZE DIMNS. ADDED

DRN — SCALE: 1 : 1
CHD — DIMENSIONS IN mm
TCD — TOLERANCE ON DIMNS UNLESS OTHERWISE STATED
APPD
DATE 21/1/07 — ALL THREADS TO CONFORM TO

WT. MASS 0.005 Kg

TO BE STAMPED OR MARKED WHERE INDICATED THUS # (LETTERS)

ALL SHARP EDGES AND CORNERS TO BE REMOVED UNLESS OTHERWISE STATED. MACHINED CORNERS TO HAVE R OUTSIDE & INSIDE EQUIVALENT CHAMFERS ARE PERMISSIBLE

MATERIAL :- ROUND BAR GOST 7417-73 / 38XA GOST 1051-73 — USED ON Cb 3301-15-30, Cb 3301-15-44

CONTROLLERATE OF QUALITY ASSURANCE (HEAVY VEHICLES) AVADI

TITLE: STUD M6x32

DS CAT NUMBER

DRAWING NUMBER 350-16A

USED ON :- (B)
Cb 3327-03-6-01
Cb 3338-403-2
Cb 3338-404-7
Cb 3327-03-6
~~Cb 306-01-20~~ (E)
~~Cb 306-02-20~~
Cb 3301-15-30-01 (D)

KVD 63590

COMMON TO V-92S2 ENGINE

DRAWING NUMBER
351-06

Rz40 (✓)

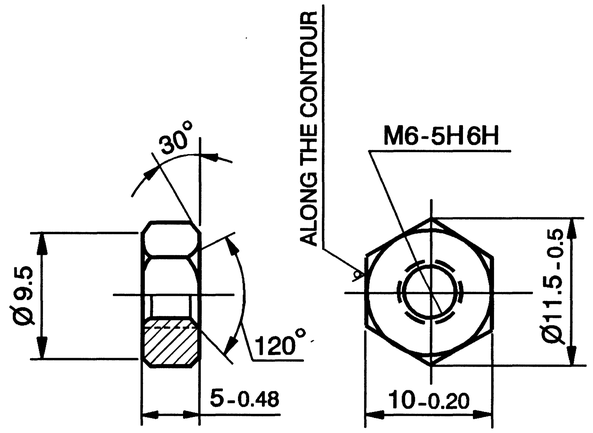

SCALE 1 : 1

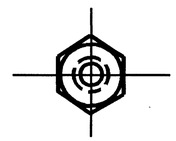

1. } DELETED
2. }
3. THE THREAD MAY BE CHECKED BEFORE COATING.
4. DELETED.
5. COATING : Cd9, CHROMATIZING, AS PER ЧЦЛ-104 WITH ELIMINATION OF HYDROGEN EMBRITTLEMENT.
6. THE REST OF THE TECHNICAL REQUIREMENTS AS PER STANDARD 82052-00.
7. ALTERNATE MATERIAL : STEEL GRADES 40 AND 50 GOST 1050-74. ROLLED STOCK OF GROUP 'B' CLASS 4, GOST 1051-73 MAY BE USED.
8. TO ENSURE HIGH QUALITY OF COATING, IT IS ALLOWED TO ELIMINATE SURFACE DEFECTS OF ROLLED STOCK WITH DECREASE OF DIMENSION AS PER ACCURACY CLASS 5.

(A)

(C) MATERIAL : STEEL 709 M40 (EN 19) TO BS: 970. Pt-I - 1983.

(E) Cb 327-00-47-01
(D) CQA(HV)5.06.607E
(B) Cb 20-08-00-7
(G) ~~Cb 20-32-00-4~~
Cb 20-23-34-6
Cb 20-23-33-6
Cb 20-22-00-7
Cb 20-12-01-13
Cb 20-11-01-9
Cb 20-09-07
Cb 20-06-13-6
Cb 20-06-12-6
Cb 20-01-00-8
Cb 20-05-47-4

(G) ~~Cb 401-10~~
~~Cb 407-7~~
Cb 3320-00-33
Cb 3335-00-9
Cb 315-606-12
Cb 3308-00-23
Cb 3308-00-17
Cb 3334-00-47
Cb 3320-00-43
Cb 406-13-75
Cb 406-13-44
Cb 315-777-2

Cb 406-13-77 (G)
Cb 406-12-77
Cb 3335-00-33 (F)
(A) Cb 20-27-004
Cb 310-00-14
Cb 406-12-75
Cb 406-12-44
Cb 337-100
Cb 327-00-73
Cb 3308-15-2
Cb 3301-00-44
Cb 3301-00-37
(G) ~~Cb 3085-00-16~~
Cb 447-00-1
Cb 3338-401-10
(G) ~~Cb 3338-404-7~~
~~Cb 3335-00-30~~ (F)

PILOT SAMPLE SHOULD BE APPROVED BEFORE BULK PRODUCTION.

EST. WT. 0.0025 Kg

TO BE STAMPED OR MARKED WHERE INDICATED THUS # (LETTERS)

ALL SHARP EDGES AND CORNERS TO BE REMOVED UNLESS OTHERWISE STATED MACHINED CORNERS TO HAVE R OUT-SIDE R INSIDE EQUIVALENT CHAMFERS ARE PERMISSIBLE.

ISSUE	DATE	NATURE OF AMENDMENTS
G	04.01.20	USED ON NUMBER ADDED.
F	20.09.19	USED ON NUMBER ADDED.
E	06.08.19	USED ON NUMBER ADDED.
D	15.07.15	Pt.11 of 7th Alt. Comm. Meeting Dt.11.4.12
C	09.06.09	3 rd ALTN. COMM. MINUTES POINT 5 DATE 27.02.09
B	25.08.08	USED ON NUMBER ADDED.
A	05.9.92	EFA Lt.07263/ENG/PDO/395-4 dt.29.8.92

DRN	Sd/=
CHD	Sd/=
APPD	Sd/=
DATE	09.04.86
SCALE:-	2 : 1
DIMENSIONS IN mm	
TOLERANCE ON DIMNS UNLESS OTHERWISE STATED IS : 2102 - 69	
ALL THREADS TO CONFORM TO	

MATERIAL :- ~~HEXAGON BAR~~
(C) ~~10-4 GOST 8560-78~~
~~45-8 GOST 1051-73~~

USED ON :- Cb 3342-188-3Cb
Cb 315-606-5 ~~Cb 327-00-45~~ (E)
Cb 402-93-1

CONTROLLERATE OF QUALITY ASSURANCE (HEAVY VEHICLES) AVADI

TITLE :- NUT M6

D S CAT NUMBER

DRAWING NUMBER 351-06

N. S (N SARAVANAN) SSO-I Dt. 28 Aug 2019

DRG. RE-INDIANIZED BASED ON RUSSIAN ORIGINAL ISSUE - NIL.
COMMON TO UTD-20, V46-6 & V-92S2 ENGINES
KVD No. 78016

A11
SIZE A3

352-26

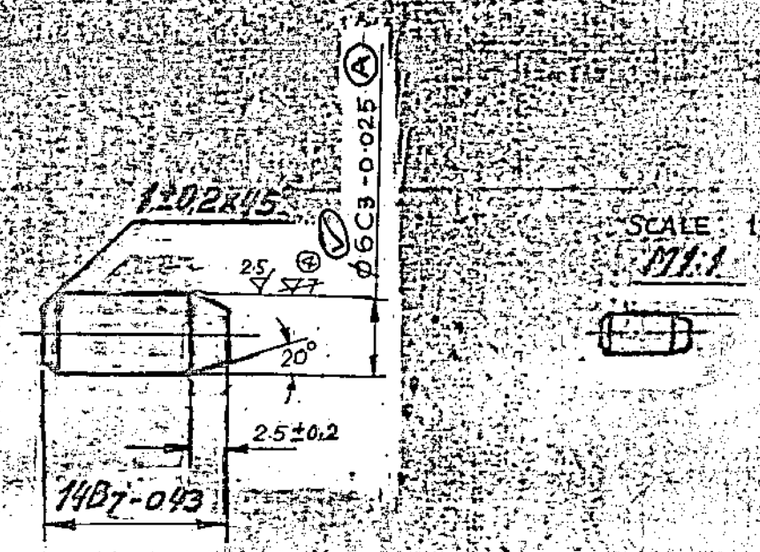

COMMON TO V-92S2 ENGINE

3. Sharp edges should be blunted.
4. Coating : Chemical oxidizing, oil finishing.
5. HRC 26 ..... 32 is allowed. Inspection group IV TT-11.
6. Alternate material : Steel 50 GOST 1050-74.
8. REPAIR SIZE DIMENSIONS ARE ADDED WHERE INDICATED THUS (A) BASED ON OVERHAUL SPECIFICATIONS PART III REPAIR DRAWINGS **.

* ROUND BAR
GOST 7417-75
45 GOST 1051-73

(C) EQUIVALENT MATERIAL
STEEL 080 M40 (EN 8) TO BS: 970 OR
45 CB TO IS 1570

** (A)

Sl NO	R_1	R_2	REMARKS
1	$\phi 6.5^{-0.03}$	$\phi 7^{-0.03}$	ALL OTHER CONDITIONS AS PER STD DRGS.

7. EXPLANATORY NOTE:-

Material quoted :- Round Bar $\frac{\text{GOST 7417-75}}{45 \quad \text{GOST 1051-73}}$

Alternate material quoted: 50 GOST 1050-74

Pertains to sized, cold rolled or cold drawn steel with round section

45 and 50 are grades of steel GOST 1051-73

CHEMICAL COMPOSITION :

Grade of steel	CONTENTS OF ELEMENTS %							
	C	Si	Mn	Cr	P	Cu	S	Ni
				MAXIMUM				
45	0.42-0.50	0.17-0.37	0.50-0.80	0.25	0.035	0.25	0.04	0.25
50	0.47-0.55	0.17-0.37	0.50-0.80	0.25	0.035	0.25	0.04	0.25

MECHANICAL PROPERTIES :

Grade of steel	Tensile strength Kgf/mm² (min)	Yeild point Kgf/mm² (min)	Elongation % (min)	Reduction in area % (min)	Impact strength Kgf/cm² (min)
45	61	36	16	40	5
50	64	38	14	40	4

PROT SAMPLE SHOULD BE APPROVED BY A H S P BEFORE BULK PRODUCTION

ISSUE	DATE	NATURE OF AMENDMENTS
C	10 7/10	4th ALT. COMM. Mfg. MINT Pt. No 7 DT. 26-10-09
B	25.8.08	USED ON NUMBER ADDED
A	1.11.95	REPAIR SIZE DIMNS ADDED

EST. MASS 0.004 Kg

TO BE STAMPED OR MARKED WHERE INDICATED THUS ◇ ARTERAN

ALL SHARP EDGES AND CORNERS TO BE REMOVED UNLESS OTHERWISE STATED MACHINED CORNERS TO HAVE R OUTSIDE R INSIDE EQUIVALENT CHAMFERS ARE PERMISSIBLE

DRN — SCALE :- 2:1

CHD — DIMENSIONS IN mm

TCD — TOLERANCE ON DIMNS UNLESS OTHERWISE STATED

APPD

DATE 2.15.87 — ALL THREADS CONFORM TO

MATERIAL :- * SEE ABOVE

USED ON :- Cb 3301-15-44, Cb 3301-15-30, Cb 3338-403-2 (B)

CONTROLLERATE OF INSPECTION (HEAVY VEHICLES) AVADI

TITLE :- ROUND PIN 6C3×14

D S CAT NUMBER

DRAWING NUMBER 352-26

DRAWING NUMBER
353-11

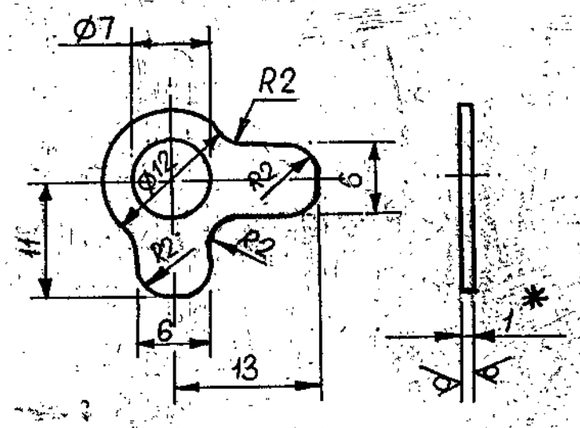

1. REQUIREMENTS PLACED UPON STAMPING ARE AS PER STANDARD 82050-16.
2. STRAIGHTEN AFTER STAMPING.
3. COATING: ZINC-PLATED 9 MICRONS THICK, OILED, WITH REMOVAL OF HYDROZEN EMBRITTLEMENT.
4. * DIMENSION IS GIVEN FOR REFERENCE.

5. REFERENCE MATERIAL QUOTED :

Rz80 (✓)

EXPLANATORY NOTE :

a) COLD ROLLED LOW CARBON STEEL TAPE OF STEEL GRADE - 08 ПС (SEMI-KILLED), CONDITION OF MATERIAL - SOFT (M), WITH 2nd GROUP OF APPEARANCE AND SURFACE QUALITY (ROUGHNESS PARAMETER - Ra ≤ 1.25 MICRON) AND THICKNESS 1mm.

b) CHEMICAL COMPOSITION OF STEEL 08ПС TO GOST 1050-74.

CARBON %	SILICON %	MANGA-NESE (MAX) %	CHROMIUM (max)	SULPHUR (max)	PHOSPHO-RUS (max)	COPPER (max)	NICKEL (max)
0.05-0.11	0.05-0.17	0.35 0.65	0.10	0.040	0.035	0.25	0.25

C) PHYSICAL PROPERTIES :-

(i) ULTIMATE TENSILE STRENGTH - 32-45 Kgf/mm²

(ii) RELATIVE ELONGATION - 17 % (min)

(A) ** Cb 20-05-47-4, Cb 20-09-07 Cb 20-11-01-9, Cb 20-12-01-13, Cb 3301-00-44, Cb 401-01, Cb 315-662-16, Cb 315-777-2, Cb 3301-00-37

(B) EQUIVALENT MATERIAL Gr. O IS: 513-1994

COMMON TO V-92S2 & UTD-20 ENGINES

PILOT SAMPLE SHOULD BE APPROVED BY A H S P BEFORE BULK PRODUCTION

EST. WT. 0.0011 Kg

TO BE STAMPED OR MARKED WHERE INDICATED THUS ⌗ (LETTERS)

ALL SHARP EDGES AND CORNERS TO BE REMOVED UNLESS OTHERWISE STATED MACHINED CORNERS TO HAVE R OUT SIDE R INSIDE EQUIVALENT CHAMFERS ARE PERMISSIBLE.

ISSUE	DATE	NATURE OF AMENDMENTS
B	17-3-10	4th Alt.Comm.Mt.Minutes Pt.No.1 Dt.26.10.09
A	25.8.08	USED ON NUMBER ADDED

DRN		
CHD		
TCD	Narayana Bhat	
APPD		
DATE	24-4-1987	
SCALE:- 2 : 1		
DIMENSIONS IN mm		
TOLERANCE ON DIMNS UNLESS OTHERWISE STATED IS:2102-69		
ALL THREADS TO CONFORM TO		

MATERIAL:- STRIP 08пс - M - 2 - 1 GOST 503-81

USED ON: Cб 3338-401-10 Cб 20-27-00-4 **

CONTROLLERATE OF QUALITY ASSURANCE(HEAVY VEHICLES) AVADI

TITLE: LOCK WASHER 7

D S CAT NUMBER

DRAWING NUMBER 353-11

SIZE A3

DRAWING NUMBER
356-57

Rz 80 (✓)

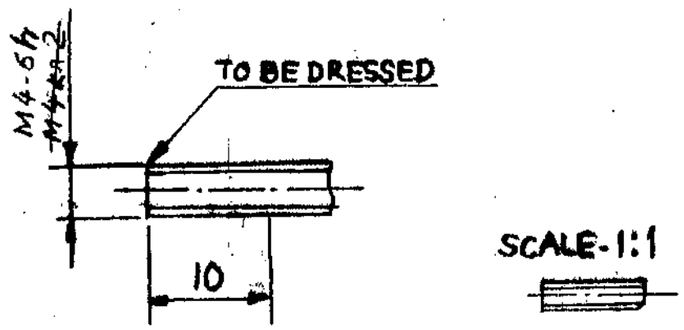

~~1.~~
~~2.~~
3. OTHER TECHNICAL REQUIREMENTS SHOULD BE CARRIED OUT AS PER STANDARD 82052-00.

4. TO BE CUT FROM THE BAR TO SUIT THE PLATE AFTER SETTING IN COMPONENT OR UNIT.

5. SHARP EDGES ARE TO BE BLUNTED.

(A) 6. ALTERNATE MATERIAL; Л63 GOST 15527-70.

COMMON TO V92S2 ENGINE.

Cb 3312-92-6 (B)

PILOT SAMPLE SHOULD BE APPROVED BY A H S P BEFORE BULK PRODUCTION

EST. WT. 0.0011 Kg

TO BE STAMPED OR MARKED WHERE INDICATED THUS # I LETTERS)

ALL SHARP EDGES AND CORNERS TO BE REMOVED UNLESS OTHERWISE STATED MACHINED CORNERS TO HAVE R OUT SIDE R INSIDE EQUIVALENT CHAMFERS ARE PERMISSIBLE.

ISSUE	DATE	NATURE OF AMENDMENTS
B	05.1.22	USED ON NUMBER ADDED.
A	11.7-96	AUTHY. NOTN. NO. BK87-300

DRN
CHD
TCD
APPD
DATE 11-07-96
SCALE: 2:1
DIMENSIONS IN mm
TOLERANCE ON DIMNS UNLESS OTHERWISE STATED IS: 2102-69.
ALL THREADS TO CONFORM TO

MATERIAL:- BRASS AC 55-1, GOST 15527-70.

USED ON:- CB [illegible] CB 3338-108, CB 3338-400, CB 3338-402-4, CB 3312-92

CONTROLLERATE OF QUALITY ASSURANCE (HEAVY VEHICLES) AVADI.

TITLE
LOCKING WOOD SCREW

D S CAT NUMBER

DRAWING NUMBER
356-57

USED ON

Сб 3338-402-4

ITEM	DRAWING NUMBER	D S CAT NUMBER	DESCRIPTION	No. OFF	REMARKS
	Сб 3338-427 сб		BUSH BODY ASSY		
	& ITEM LIST				
1	3338-500		BUSH BODY	1	DETAILS COVERED IN ASSY. INO DRG
			STEEL 15 GOST 1050-74		
2			Бр С-30 GOST 493-79 ⊗	0,031	
		⊗	Please see the material Explanatory note in the Assy. drg.		

ISSUE	DATE	NATURE OF AMENDMENTS	ISSUE	DATE	NATURE OF AMENDMENTS

I/E CREATED BASED ON RUSSIAN ORIGINAL ISSUE-NIL (BK 82-596)

DRN	—	CONTROLLERATE OF QUALITY ASSURANCE (HEAVY VEHICLES) AVADI.		
CHD		TITLE: BUSH BODY ASSY		
TCD				
APPD		SHT. No. 1 OF 1	D S CAT NUMBER	ITEM LIST FOR Сб 3338-427
DATE	22-8-88			

DRAWING NUMBER
СБ 3338-427 СБ

ЕСКД

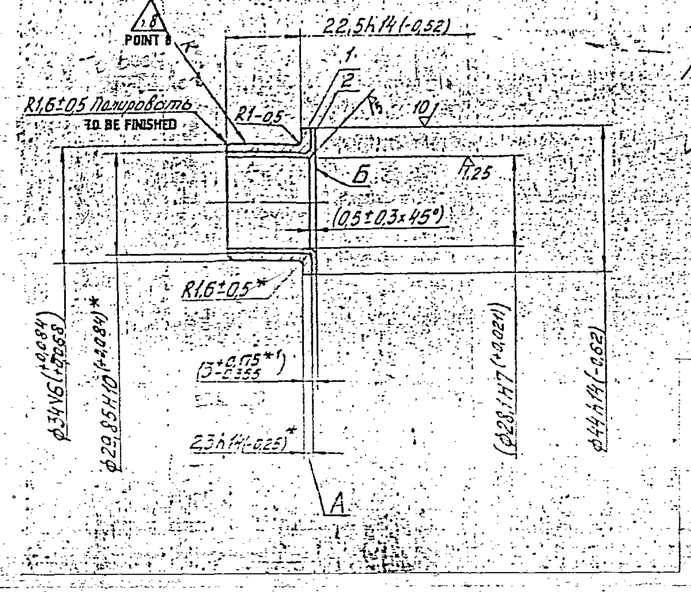

1. Заменитель материала сталь 10 ГОСТ 1050-74 для детали поз. 1.
2. Заливку свинцовистой бронзой и подготовку поверхностей втулки под заливку производить по ТТМ 43-77.
3. Толщина слоя свинцовистой бронзы после сборки: по торцу Б - 0,7мм $^{+0,525}_{-0,365}$ мм, радиальная - 0,8мм ± 0,25мм.
4. Допускается уменьшение размера А на 0,1мм сверх допуска.
5. Размеры в скобках - после сборки.
6.* Размеры для стали.
7.*1 Размер для справок.
8. Клеймить по ИЛ-16-73 раствором №1

1. ALTERNATE MATERIAL : STEEL 10 GOST 1050-74 FOR COMPONENT 1.
2. CASTING OF LEADED BRONZE AND PREPARATION OF BUSH SURFACES FOR CASTING - TO BE CARRIED OUT ACCORDING TO TTM 43 - 77.
3. THICKNESS OF LEADED BRONZE LAYER AFTER ASSEMBLY ALONG END FACE Б - 0,7 mm $^{+0,525}_{-0,365}$ mm. RADIAL - 0,8 mm ± 0,25 mm.
4. DIMENSION A MAY BE REDUCED TO 0,1 mm OF EXCEEDING TOLERANCE.
5. DIMENSION IN BRACKETS - AFTER ASSEMBLY.
6. * DIMENSION FOR STEEL
7. *1 DIMENSION FOR REFERENCE.
8. TO BE STAMPED WITH SOULUTION No: 1.

PILOT SAMPLE SHOULD BE APPROVED BY A H S P BEFORE BULK PRODUCTION.

EST. WT. 0,083 Kg

TO BE STAMPED OR MARKED WHERE INDICATED THUS # (LETTERS)

ALL SHARP EDGES AND CORNERS TO BE REMOVED UNLESS OTHERWISE STATED MACHINED CORNERS TO HAVE R OUTSIDE R INSIDE EQUIVALENT CHAMFERS ARE PERMISSIBLE.

ISSUE	DATE	NATURE OF AMENDMENTS

DRN —
CHD
TCD
APPD
DATE 22-8-88
SCALE :- 1:1
DIMENSIONS IN mm
TOLERANCE ON DIMNS UNLESS OTHERWISE STATED IS 2102-69
ALL THREADS TO CONFORM TO —

MATERIAL :- STEEL 15 GOST 1050-74 BRONZE БР-С-30 GOST 493-79.

USED ON :- СБ 3338-402-4

CONTROLLERATE OF QUALITY ASSURANCE (HEAVY VEHICLES) AVADI

TITLE BUSH BODY ASSY

D S CAT NUMBER

DRAWING NUMBER СБ 3338-427СБ

EXPLANATORY NOTE:

Material Quoted: Steel 15 GOST 1050-74 БРС-30 GOST 493-79 Stamping
БРС-30 : Alloy grade.
Tin free foundary bronze intruded for making casting
Alternate material quoted: Steel 10 GOST 1050-74.

Chemical composition (as per GOST 1050-74)

Grade of steel.	C	Si.	Mn.	Cr	P	S	Cu	Ni
				MAXIMUM				
10	0.07-0.14	0.17-0.37	0.35-0.65	0.15	0.035	0.040	0.25	0.25
15	0.12-0.19	0.17-0.37	0.35 0.65	0.15	0.035	0.040	0.25	0.25

Mechanical Properties: (as per GOST 1050-74)

Grade of steel	Tensile strength Kgf/mm² (min)	Yield point Kgf/mm² (min)	Elongation % (min)	Reduction in area (min)
10	34	21	31	55
15	38	23	27	55

Chemical Composition (as per БРС-30 GOST 493-79)

Impurities (max)

Main components: Lead = 27.0 - 31.0

Copper = Remainder
Arsenic = 0.1
Antimony = 0.3
Tin = 0.1
Silican = 0.02
Nickel = 0.5
Phosphorus = 0.1
Iron = 0.25
Zinc = 0.1
Total = 0.9

Mechanical Properties:

Ultimate strength Kgf/mm² = 6 (min)
Relative elongation % = 4 (min)
Brinnel hardness HB = 245 (min)

ORIG. INDIANISED BASED ON RUSSIAN ORIGINAL ISSUE No: NIL (DK 82-596)

SIZE A2

USED ON	ITEM	DRAWING NUMBER	D S CAT NUMBER	DESCRIPTION	No. OFF	REMARKS
		СБ 3338-428 СБ		COVER BUSH		
		& ITEM LIST				
	1	3338-501		COVER BUSH	1	DETAILS COVERED IN ASSY. (NO. DRG)
				STEEL 15 GOST 1050-74		
	2			Бр С - 30 GOST 493-79 (*)	0,031	
				(*) Please see the material explanatory note in the ASSY. drg.		

СБ 3338-403-2

I/L CREATED BASED ON RUSSIAN ORIGINAL ISSUE-NIL (BK 82-556)

ISSUE	DATE	NATURE OF AMENDMENTS	ISSUE	DATE	NATURE OF AMENDMENTS

DRN	—	CONTROLLERATE OF QUALITY ASSURANCE (HEAVY VEHICLES) AVADI		
CHD		TITLE: COVER BUSH		
TCD				
APPD				
DATE	22-8-88	SHT. No. 1 OF 1	D S CAT NUMBER	ITEM LIST FOR СБ 3338-428

DRAWING NUMBER
СБ 3338-428 СБ

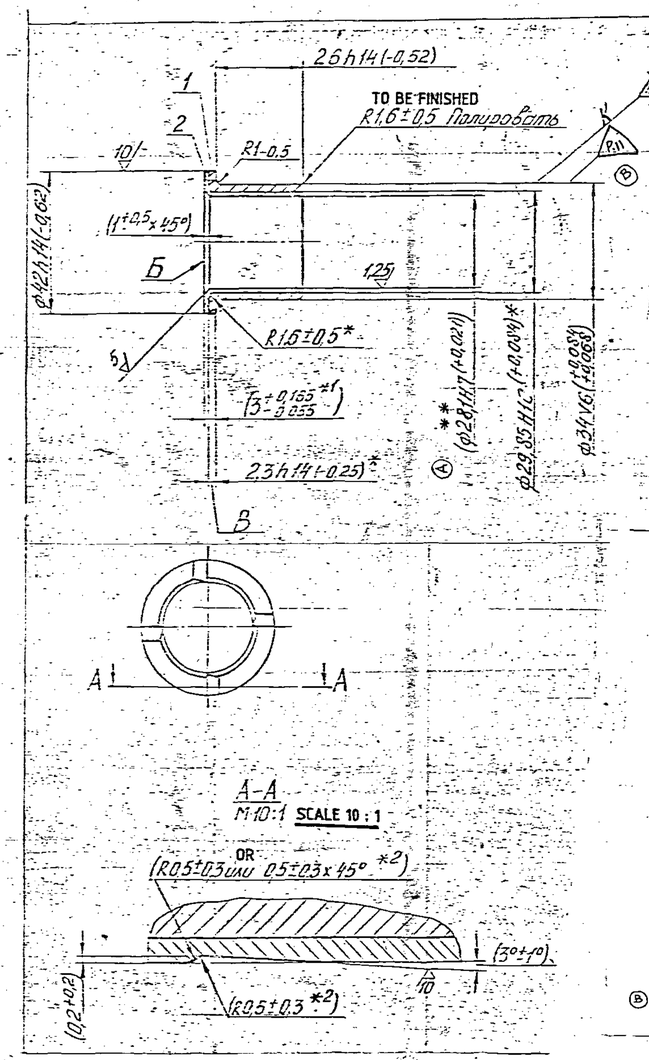

1. Заменитель материала сталь 10 ГОСТ 1050-74 для детали поз. 1.
2. Заливку свинцовистой бронзой и подготовку поверхностей втулки под заливку производить по ТТМ 43-77.
3. Толщина слоя свинцовистой бронзы после сборки по торцу Б - 0,7мм +0,415 -0,155 мм, радиальная - 0,8мм ± 0,25мм.
4. Допускается увеличение размера В на 0,1мм сверх допуска.
5. Размеры в скобках - после сборки.
6. * Размеры для стали.
7. *1 Размер для справок.
8. *2 Размеры обеспечить инструментом.
9. Клеймить по ОЛ-16-73 раствором №1.

1. ALTERNATE MATERIAL : STEEL 10 GOST 1050-74 FOR COMPNENT 1.
2. CASTING OF LEADED BRONZE AND PREPARATION OF BUSH SURFACES FOR CASTING TO BE CARRIED OUT AS PER TTM 43 - 77.
3. THICKNESS OF LEADED BRONZE LAYER AFTER ASSEMBLY ALONG END FACE b - 0,7 mm +0,415 -0,155 mm, RADIAL 0,8 mm ± 0,25 mm.
4. DIMENSION B MAY BE INCREASED TO 0,1 mm OF EXCEEDING TOLERANCE.
5. DIMENSIONS IN BRACKETS - AFTER ASSEMBLY.
6. *DIMENSIONS FOR STEEL.
7. *1 DIMENSION FOR REFERENCE.
8. *2 DIMENSIONS TO BE ENSURED WITH TOOL.
9. ~~TO BE MARKED WITH SOLUTION No. 1 ACCORDING TO ОЛ 16 - 73.~~

(A) 10. ** CUTTING ALLOWANCE OF 0.4 mm TO 0.9 mm IS ALLOWED ON INTERNAL DIMENSION OF THE BUSH.

11. ~~TO BE MARKED WITH SOLUTION No. 5 по ОЛ-581-85 или~~

(B) 11. TO MARK BY COMPOUND N1 OR N5 AS PER ОЛ-581-85 OR ELECTROCHEMICAL METHOD.

EXPLANATORY NOTE:

Material Quoted: steel 15 GOST 1050-74 БРС-30 GOST 493-79 Stamping
БРС-30 : Alloy grade.
Tin free foundary bronze intruded for making casting
Alternate material quoted: steel 10 GOST 1050-74.

Chemical composition (as per GOST 1050-74)

Grade of steel	C	Si.	Mn.	Cr	P	S	Cu	Ni
				MAXIMUM				
10	0.07-0.14	0.17-0.37	0.35-0.65	0.15	0.035	0.040	0.25	0.25
15	0.12-0.19	0.17-0.37	0.35 0.65	0.15	0.035	0.040	0.25	0.25

Mechanical Properties: (as per GOST 1050-74)

Grade of steel	Tensile strength kgf/mm² (min)	Yield Point kgf/mm²(min)	Elongation % (min)	Reduction in area (min)
10	34	21	31	55
15	38	23	27	55

Chemical Composition (as per БРС-30 GOST 493-79)

Impurities (max)

Main components: Lead = 27.0 - 31.0

Copper = Remainder
Arsenic = 0.1
Antimony = 0.3
Tin = 0.1
Silican = 0.02
Nickel = 0.5
Phosphorus = 0.1
Iron = 0.25
Zinc = 0.1
Total = 0.9

Mechanical Properties:

Ultimate strength kgf/mm² = 6 (min)
Relative elongation % = 4 (min)
Brinnel hardness HB = 245 (min)

PILOT SAMPLE SHOULD BE APPROVED BY A H S P BEFORE BULK PRODUCTION.

EST. WT.	TO BE STAMPED OR MARKED WHERE INDICATED THUS # (LETTERS)
0,086 Kg	

ALL SHARP EDGES AND CORNERS TO BE REMOVED UNLESS OTHERWISE STATED MACHINED CORNERS TO HAVE R OUTSIDE R INSIDE EQUIVALENT CHAMFERS ARE PERMISSIBLE.

ISSUE	DATE	NATURE OF AMENDMENTS
B	9-5-96	AUTHY BK 88-226
A	6-7-93	Authy Tel. no 93519 (V66-6) CGR(CVD) 21-5-JUN 93

DRN	—	
CHD		
TCD		
APPD		
DATE	22-8-88	
SCALE :- 1:1		
DIMENSIONS IN mm.		
TOLERANCE ON DIMNS UNLESS OTHERWISE STATED IS 2102-69		
ALL THREADS TO CONFORM TO		

MATERIAL :- STEEL GOST 1050-74 BRONZE БР С - 30 GOST 493-70

USED ON :- СБ 3338-403-2

CONTROLLERATE OF QUALITY ASSURANCE (HEAVY VEHICLES) AVADI

TITLE COVER BUSH

D S CAT NUMBER

DRAWING NUMBER СБ 3338-428 СБ

ORG. INDIANISED BASED ON RUSSIAN ORIGINL ISSUE No: NIL (BK 82-596).

A-9 / 63

SIZE A2

3338-420-3

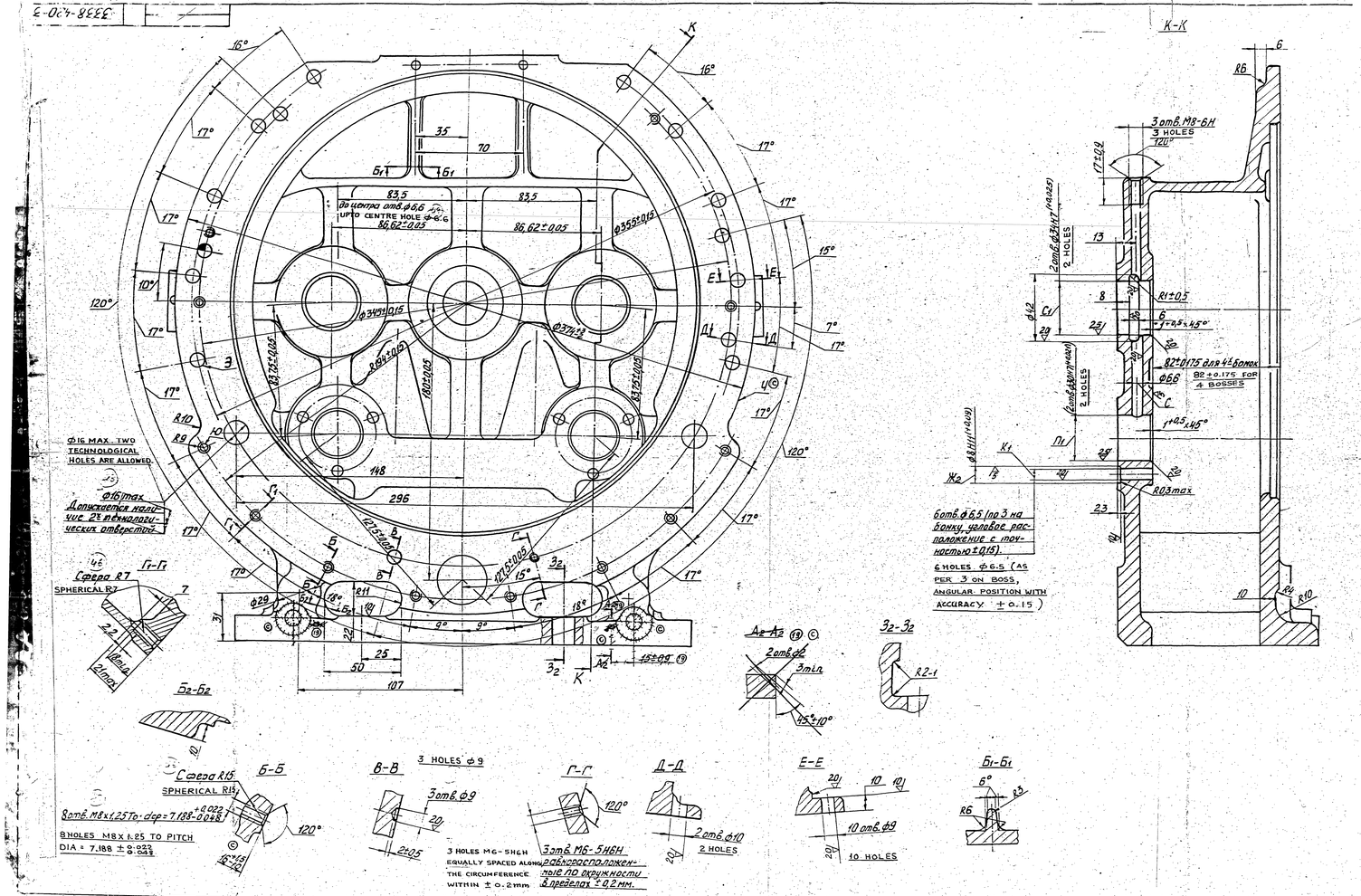

1. REQUIREMENTS OF CASTING SHOULD BE AS PER TTM 42-77.
2. DRAFT SHOULD BE MAX. 2°.
3. DIMENSIONS WITHOUT TOLERANCE FOR CASTING SHOULD BE MAINTAINED WITH ACCURACY :- UPTO 100 mm $^{+1.5}_{-1.0}$ mm ; ABOVE 100 mm $\pm^{2}_{1.5}$ mm.
4. LOCAL DEVIATIONS OF WALL THICKNESS:- $\pm^{2}_{1.5}$ mm
5. CASTING RADII WITHOUT TOLERANCES SHOULD BE MAINTAINED WITH ACCURACY UPTO 10 mm, $^{+1.5}_{-1.0}$ mm ; FROM 10 mm TO 30 mm ±1.5 mm ; FROM 30 mm TO 80 mm $^{+2.5}_{-1.5}$ mm ; ABOVE 80 mm ±2 mm.
6. UNSPECIFIED CASTING RADII SHOULD BE MAINTAINED AS 3 TO 5 mm.
7. COATING OF INNER SURFACE : BAKELITE VARNISH ЛБС-1 AS PER ИЛ-665-86, OUTER SURFACE SHOULD BE SAND BLASTED. IN CASE OF METAL MOULD CASTING, SAND BLASTING MAY NOT BE CARRIED OUT.
8. UNSPECIFIED LIMIT DEVIATIONS OF MACHINING : HOLES - AS PER H14, SHAFTS - AS PER h14, OTHERS - AS PER $\pm\frac{IT14}{2}$
9. TECHNICAL REQUIREMENTS FOR THREAD SHOULD BE AS PER STANDARD 82021-00
10. DIMENSION П SHOULD BE MAINTAINED AS PER FIG OR BY COMBINEDLY MACHINING WITH MATING COMPONENT.
11. RUN-OUT OF SURFACE T1 RELATIVE TO SURFACE A1 SHOULD NOT EXCEED 0.06 mm; TO BE ENSURED BY TECHNOLOGY AND BY RANDOM CHECKING.
12. NON-SQUARENESS OF PLANE Ф1 RELATIVE TO SURFACE A1 ON ф 310 mm SHOULD NOT EXCEED 0.05 mm, TO BE ENSURED BY TECHNOLOGY OR BY RANDOM CHECKING.
13. NON-PARALLELISM OF AXES OF SURFACES H1 TO SURFACE Ю1 SHOULD NOT EXCEED 0.02 mm OVER 120 mm LENGTH.
14. NON-SQUARENESS OF SURFACE Ч1 TO THE AXES OF HOLES H1 SHOULD NOT EXCEED 0.03 mm OVER 250 mm LENGTH ; SHOULD BE ENSURED ON HEIGHT 25 mm FROM SURFACE Ю1.
15. FITTING OF SURFACE Ю SHOULD BE CHECKED BY BLUEING ; IMPRINT SHOULD BE UNIFORM OVER AN AREA OF 1 Sq.cm. THERE SHOULD NOT BE LESS THAN TWO SPOTS.
16. DEVIATION FROM NOMINAL POSITION OF HOLES Э, Э1 AND Ю SHOULD NOT EXCEED 0.15 mm ON ANY OF THE SIDES.
17. OIL DUCT SHOULD BE TESTED WITH A PRESSURE OF (11+1) Kgf/cm². AT A TEMPERATURE OF (70±10)°C FOR 5 MINUTES. LEAKAGE IS NOT ALLOWED.
18. SHARP EDGES ARE NOT ALLOWED.
19. SHIFTING OF OUTER CONTOUR Ч RELATIVE TO SURFACE T1 SHOULD BE WITHIN ±1 mm.
20. DEVIATION OF HOLE C FROM NOMINAL POSITION AT THE OUTLET IN HOLE H1 SHOULD NOT EXCEED 1.5 mm AND AT THE OUTLET IN HOLE П1, 1.0 mm.
21. SHIFT OF AXIS OF HOLE Ж2 RELATIVE TO THE AXIS OF HOLE K1 SHOULD NOT EXCEED 0.1 mm
22. GRADE OF MATERIAL SHOULD BE MARKED AS PER GOST 21.71-79. TYPE П08 70 10 GOST 2930-62
23. NON-SYMMETRY OF HOLES H1 RELATIVE TO SURFACE 3 AND 31 SHOULD NOT EXCEED 0.5 mm
24. ON SURFACES И, Л1, M1, H1 AND Я SQUARE TECHNOLOGICAL GRID WITH PITCH 20 mm IS ALLOWED ; CONTOUR LINES SHOULD NOT BE MORE THAN 0.5 mm IN HEIGHT AND NOT MORE THAN 1 mm IN WIDTH.
25. NON-FLATNESS OF SURFACE Ф1 SHOULD NOT EXCEED 0.06 mm.
26. NON-SQUARENESS OF END FACE P1 TO THE AXIS OF THREAD ON ф 35 mm SHOULD NOT EXCEED 0.1 mm.
27. NON-FLATNESS OF SURFACE Ч1 ON ф 70 mm AROUND HOLES H1 AND П1 AND ON ф 80 mm AROUND HOLES A1 AND C1 SHOULD NOT EXCEED 0.03 mm.
28. ON SURFACES Ц1, Ш1 AND Щ1 BLACK SPOTS OF CASTING ARE ALLOWED.
29. INNER CAVITY SHOULD BE LISTED FOR LEAK PROOFNESS WITH WATER AT A PRESSURE OF 2 TO 3 Kgf/cm² WITH TEMPERATURE OF WATER (70+10)°C FOR 3 MINUTES BEFORE BAKELITE COATING. LEAKAGE OF WATER IS NOT ALLOWED. AIR TIGHTNESS SHOULD BE CHECKED WITH AN AIR PRESSURE OF 0.1 TO 0.2 MPa (1 TO 2 Kgf/cm²) IN WATER BATH. LEAKAGE OF AIR IS NOT ALLOWED.
30. ~~SHOULDER ON TRANSITION OF HOLE П2 TO HOLE P2 IS NOT ALLOWED.~~
31. ~~THROUGH HOLES П2 WITH DIMENSION C2 MAY BE MADE.~~
32. NON-PARALLELISM OF SURFACES У1 RELATIVE TO SURFACE Ю1 SHOULD NOT EXCEED 0.2 mm ; TO BE ASSURED BY TECHNOLOGY.
33. SHOULDER NOT EXCEEDING 0.2 mm IS ALLOWED IN PLACE Я1.
34. IN TROPICAL DESIGN, COATING : BAKELITE VARNISH ЛБС-1 AS PER ИЛ-665-86, EXCEPT THE PLACES OF MACHINING.
35. BETWEEN SECTIONS Г2-Г2 AND B2-B2 RADIUS Л2 SHOULD SMOOTHLY MERGE IN RADIUS K2.
36. PROJECTION OF SECTIONS Л2 OVER SURFACE Ч1 SHOULD NOT EXCEED 0.2 mm ; THEIR NON-SQUARENESS TO THE AXIS OF HOLE H1 SHOULD BE AS PER P-14 ; PROJECTION OF SECTIONS Ж OVER SECTIONS Л2 1 TO 2 mm ; COORDINATE OF HOLES ON PLANE Ю1 SHOULD BE MAINTAINED FROM SECTIONS Л2.
37. NON SQUARENESS OF PLANE Ч1 TO THE AXIS OF HOLE H1 ON ф 70 mm AROUND HOLE H1 SHOULD NOT EXCEED 0.06 mm ; FACING UPTO 0.2 mm IS ALLOWED.
38. DIMENSIONS IN BRACKETS - AFTER ASSEMBLY
39. *DIMENSIONS FOR REFERENCE.

PILOT SAMPLE SHOULD BE APPROVED BY A H S P BEFORE BULK PRODUCTION

EST MASS 7.85 Kg	TO BE STAMPED OR MARKED WHERE INDICATED THUS R (LETTERS)
ALL SHARP EDGES AND CORNERS TO BE REMOVED UNLESS OTHERWISE STATED. MACHINED CORNERS TO HAVE R OUTSIDE R INSIDE EQUIVALENT CHAMFERS ARE PERMISSIBLE.	

ISSUE	DATE	NATURE OF AMENDMENTS
C	24.6.95	BM-86-170, 87-278, 88-174 & 88-274

DRN / CHD / TCD / APPD / DATE 10-04-95 / SCALE 1:1 / DIMENSIONS IN mm / TOLERANCE ON DIMNS UNLESS OTHERWISE STATED IS 2102-69 ALL THREADS TO CONFORM TO

MATERIAL - АЛ19 GOST 2685-75

USED ON - 3338-402-4

CONTROLLERATE OF QUALITY ASSURANCE (HEAVY) VEHICLES AVADI

TITLE: BODY OF SUPER CHARGER

D S CAT. NUMBER

DRAWING NUMBER SHT 1 of 2 3338-420-3

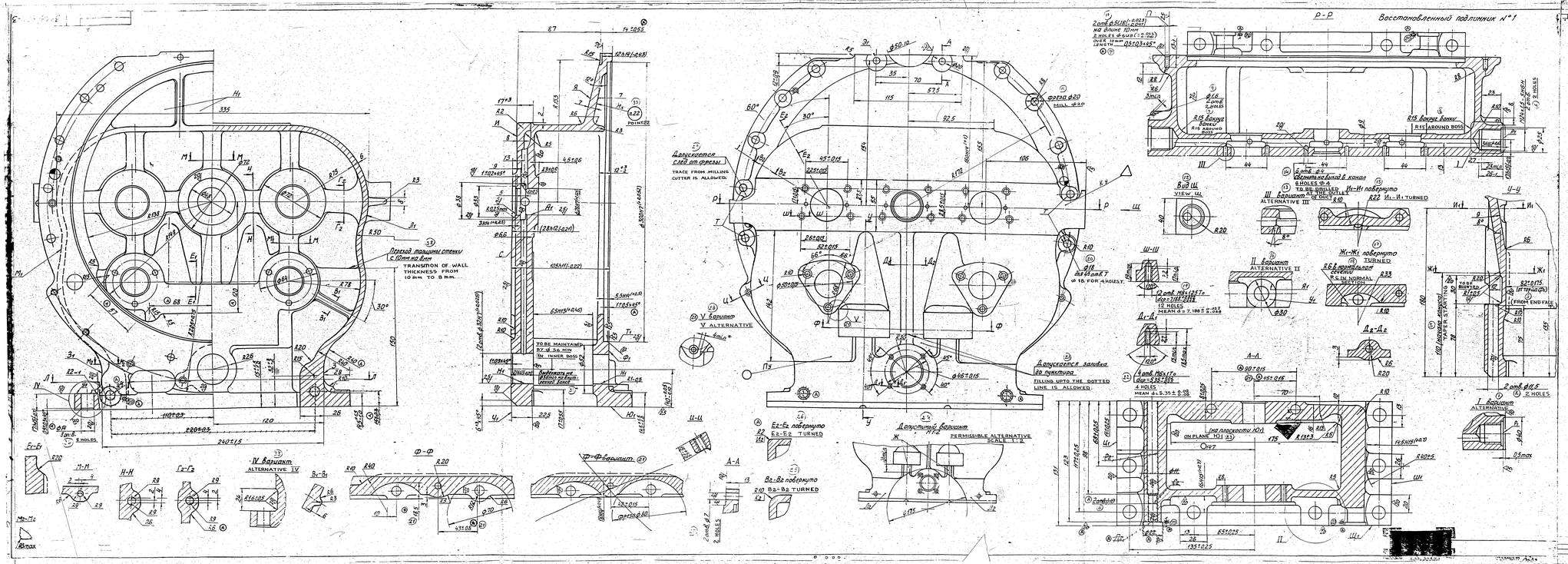
Восстановленный подшипник №1
Переход толщины стенки с 10мм на 8мм
TRANSITION OF WALL THICKNESS FROM 10 mm TO 8 mm.
Допускается след от фрезы
TRACE FROM MILLING CUTTER IS ALLOWED.
Допускается заливка до пунктира
FILLING UPTO THE DOTTED LINE IS ALLOWED.
Допустимый вариант
PERMISSIBLE ALTERNATIVE
SCALE 1:2
V вариант
V ALTERNATIVE
IV вариант
ALTERNATIVE IV
III вариант
ALTERNATIVE III
II вариант
ALTERNATIVE II
I вариант
ALTERNATIVE I
Вид Ш
VIEW Ш
Ш-Ш
Ж-Ж повернуто
Ж-Ж TURNED
И-И повернуто
И-И TURNED
Ц-Ц
Е2-Е2 повернуто
Е2-Е2 TURNED
В2-В2 повернуто
В2-В2 TURNED
Ф-Ф
Ф-Ф вариант
А-А
Р-Р
Д-Д
Д2-Д2
Е-Е
Н-Н
Г2-Г2
В1-В1
М1-М1
ON PLANE 1011
ALL SHARP EDGES AND CORNERS THAT REMAIN UNLESS OTHERWISE STATED, ARE TO BE BROKEN OUTSIDE & OUTSIDE & INSIDE, EQUIVALENT OF RADIUS ARE PERMISSIBLE
PILOT SAMPLE SHOULD BE APPROVED BY S.N.K.P. BEFORE MASS PRODUCTION.
MATERIAL
CERTIFICATE OF QUALITY ASSURANCE (HEAVY VEHICLES) A.V.S.I.
DRAWING IN MM.
TOLERANCE ON SPACE UNLESS OTHERWISE STATED
ALL THREADS / TS COMPANY TQ
DRAWN
CHD
SIGN
APPD
DATE
SCALE
DEAD Dim.
C.B. 3338-420-4
TITLE
BODY OF SUPER CHARGER
DRAWING NUMBER
3338-420-3
SHEET 8
D.S.EXT NUMBER
A
26.4.98
Вн 86-170 / Вк 87-518
Вн 88-1 / А. 89.88.175
NATURE OF AMENDMENTS
ISSUE
DATE

DRAWING NUMBER
3338-432-1

5/ (✓)

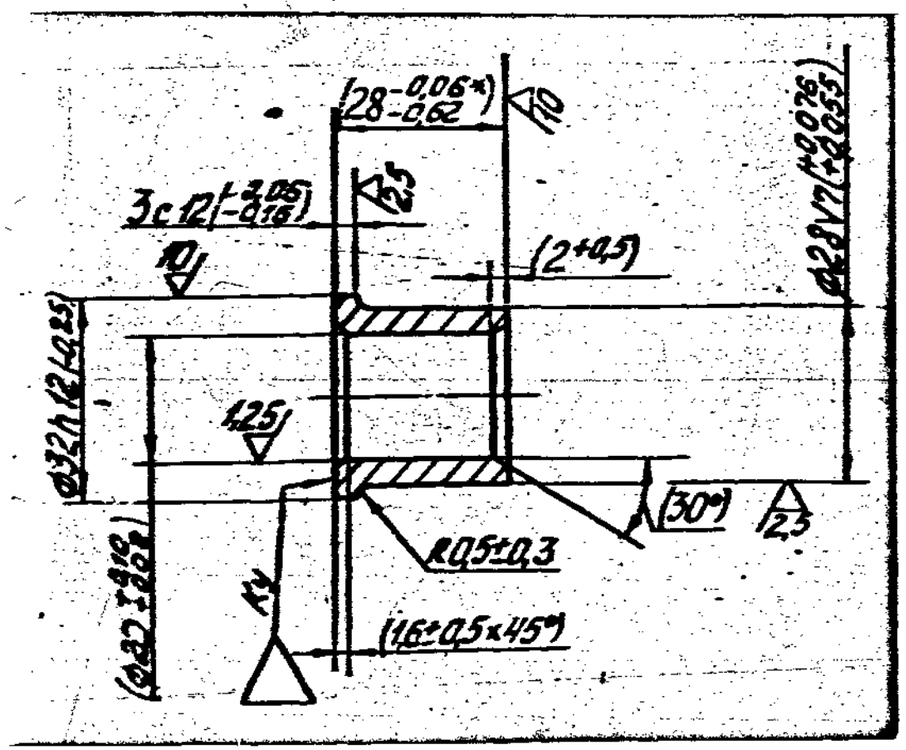

1. Requirements for casting as per TTM-55-78
2. Dimensions given in brackets should be obtained after assembly.
3. * Dimension for reference.

EXPLANATORY NOTE:

Material Quoted : Bronze BP 010 C10 TTM 55-78

Pertains to bronze casting.

BP 010 C10 : Grade of bronze alloy.

Chemical Composition:

Tin = 9.0–11.0
Lead = 8.0–11.0
Copper = Balance

Impurities (maximum)

Zinc : 0.5 ; Phosphorus : 0.05
Aluminium : 0.02 Antimony : 0.30
Iron : 0.2 Total : 0.9
Silicon : 0.02

Mechanical Properties	Chilled	Sand
Method of casting	C (min)	S (min)
Ultimate tensile strength kgf/mm²	20	18
Relative elongation after fracture:	6	7
Hardness as per Brinnel HB	78	65

PILOT SAMPLE SHOULD BE APPROVED BY A H S P BEFORE BULK PRODUCTION

EST. WT. 0.08 kg.

TO BE STAMPED OR MARKED WHERE INDICATED THUS # (LETTERS)

ALL SHARP EDGES AND CORNERS TO BE REMOVED UNLESS OTHERWISE STATED MACHINED CORNERS TO HAVE R OUT SIDE R INSIDE EQUIVALENT CHAMFERS ARE PERMISSIBLE.

ISSUE	DATE	NATURE OF AMENDMENTS
A	5-7-88	AUTHY. BK-85-634

DRN
CHD
TCD
APPD
DATE 23-2-83
SCALE:- 1:1
DIMENSIONS IN mm
TOLERANCE ON DIMNS UNLESS OTHERWISE STATED IS:2102-69
ALL THREADS TO CONFORM TO

MATERIAL:- BRONZE BP 010 C10 TTM-55-78 CASTING.

USED ON CB 3338-402-4.

CONTROLLERATE OF QUALITY ASSURANCE(HEAVY VEHICLES) AVADI

TITLE BUSH

D S CAT NUMBER

DRAWING NUMBER 3338-432-1

A9

SIZE A3

3338 - 498

ЕСКД

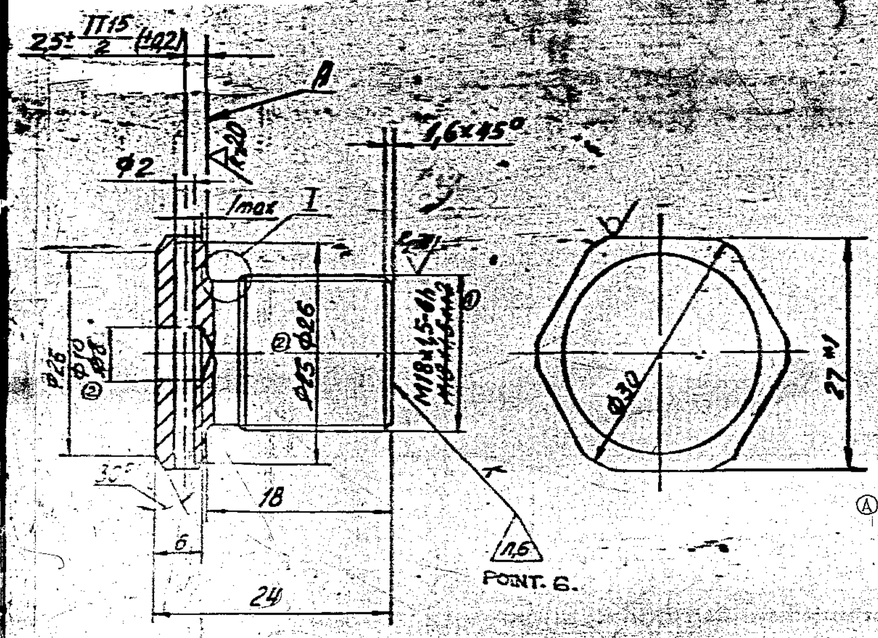

1. INSPECTION GROUP V TY-11.
2. UNSPECIFIED LINEY DEVIATIONS : OF HOLES AS PER H14, OF SHAFTS – AS PER h14, OF THE REST OF DIMENSIONS – AS PER ± IT14/2
3. END PLAY OF SURFACE A RELATIVE TO THE THREAD AXIS SHOULD NOT EXCEED 0.1 mm (ESC).
4. SURFACE OF THREAD SHOULD BE CLEAN, FREE FROM SCORES, BURRS, STRIPPED THREADS, DENTS, CORROSION TRACES AND OTHER SURFACE DEFECTS.
5. COATING : Zn 3, CHROMATIZING AS PER ОЛ –483-82.
6. TO BE PUNCHED.
7. *1 DIMENSION FOR REFERENCE.
8. *2 DIMENSIONS SHOULD BE ENSURED WITH TOOL.
9. (A) IN TROPICALIZED MAKE THE COATING IS Cd 3, Cr AS PER UA-569-84 WITH REMOVAL OF HYDROGEN EMBRITTLEMENT.

(B) ALTERNATE MATERIAL : STEEL 080 M40 (EN 8) TO BS: 970 PT-1-1983 OR 45 C8 TO IS: 1570

*2 HEXAGON BAR 27-5 GOST 8560-78 / 45 GOST 1051-73

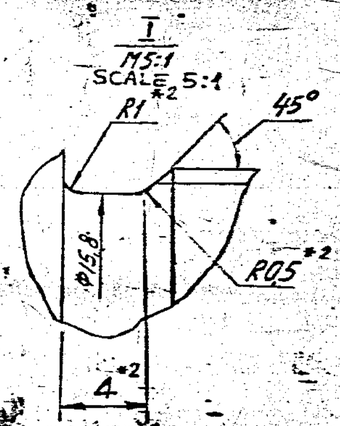

FIRST SAMPLE SHOULD BE APPROVED BY A H S P BEFORE BULK PRODUCTION

B	13/7/09	3rd. ALTN. COMM. MIN. POINT 8. DT. 27-2-09	EST. MASS 0,156 Kg	TO BE STAMPED OR MARKED WHERE INDICATED THUS ▼ (LETTERS)
A	8-2-95	AUTHY NOTN. No. B.K 86-190	ALL SHARP EDGES AND CORNERS TO BE REMOVED UNLESS OTHERWISE STATED MACHINED CORNERS TO HAVE R OUTSIDE R INSIDE EQUIVALENT CHAMFERS ARE PERMISSIBLE	
ISSUE	DATE	NATURE OF AMENDMENTS		
DRW		SCALE ► 2 : 1	MATERIAL ► * SEE ABOVE	USED ON ► CG 3338-401-10 CG 3338-402-4 CG
CHD		DIMENSIONS IN mm	CONTROLLERATE OF INSPECTION (HEAVY VEHICLES) AVADI	
TCD		TOLERANCE ON DIMS UNLESS OTHERWISE STATED	TITLE ► PLUG	
APPD			D S CAT NUMBER	DRAWING NUMBER 3338-498
DATE		ALL THREADS CONFORM TO		

EXPLANATORY NOTE :-

MATERIAL QUOTED :- HEXAGONAL BAR 27-5 GOST 8560-78 / 45 GOST 1051-73

BRIGHT STEEL HEXAGONAL FROM GRADE 45 STEEL WITH WIDTH ACCROSS FLATS 27 mm ; OF ACCURACY CLASS-5.

CHEMICAL COMPOSITION :-

CONTENT OF ELEMENTS %							
C	Si	Mn	Cr	P	S	Cu	Ni
			MAXIMUM				
0·42-0·50	0·17-0·37	0·50-0·80	0·25	0·035	0·040	0·25	0·25

MECHANICAL PROPERTIES :-

TENSILE STRENGTH	kgf/mm²	(MIN)	= 61
YIELD POINT	kgf/mm²	(MIN)	= 36
% ELONGATION		(MIN)	= 16
REDUCTION IN AREA %		(MIN)	= 40
IMPACT STRENGTH	kgf·m/cm²	(MIN)	= 5

TOOL NO.: 340-294

ISSUE	RDS REF	AMENDMENTS	SIGN	DATE

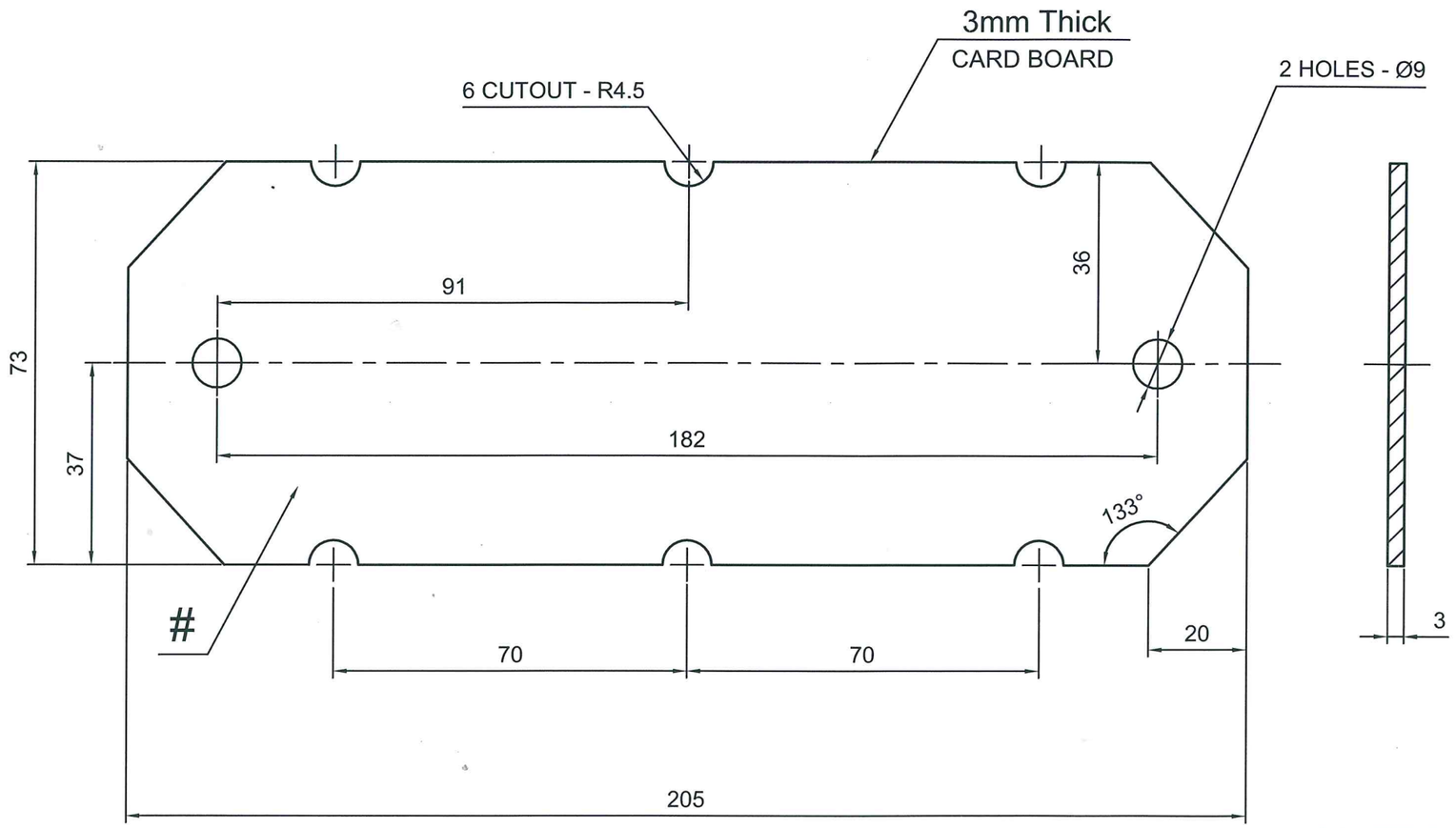

MATERIAL : CARD BOARD
3mm Thick

1. Sample to be approved before bulk production
2. # To be marked.drawing No.
3. All dimensions are in MM..

ITEM	DESCRIPTION	QTY.	MATERIAL	SPECN.	SIZE	REMARKS
1	COVER	1	CARD BOARD			

GEN. TOL	COMPONENT NO.	OPN. NO.	M / C. NO.
0 - 6 ± 0.1 6 - 30 ± 0.1 30 - 120 ± 0.5 120 - 400 ± 0.1 400 - 1000 ± 0.8 1000 - 2000 ± 1.2 2000 - 4000 ± 2.0	SB 3338-401-10		

	SIGN	DATE
DRN. BY		25/7/17
CKD. BY		25.7.17
APPD. BY		25.7.17
AUTHD. BY		

TITLE:

COVER

(FOR SUPERCHARGER)

DRG. NO. 340-294

USER APPD BY:

SCALE:- 1 : 1

HOS/EAS-2

ENGINE FACTORY, AVADI.

SHEET 1 OF 1 SHEETS

ISSUE

DRG MADE AS PER SAMPLE

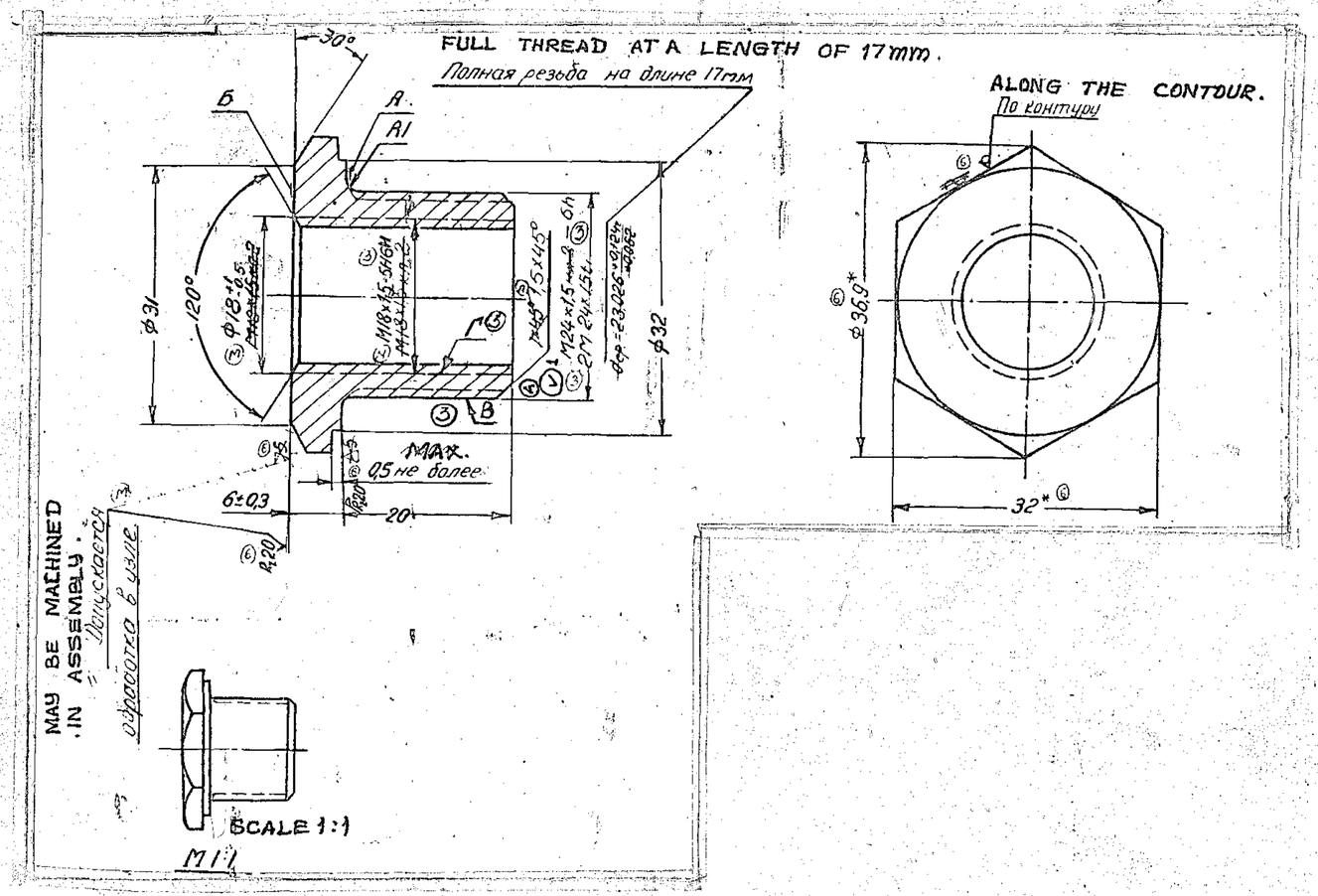

EXPLANATORY NOTE:

10. REFERENCE MATERIAL QUOTED: GAUGED HEXAGONAL STEEL BAR 32mm A/F, CLASS OF ACCURACY '5' (-0.340) TO GOST 8560-78, HIGH GRADE STEEL 45 NORMAL SURFACE QUALITY TO GOST 1051-73 AND REFERENCE NOTE '5' ON ALTERNATE MATERIALS STEEL GRADE 40 & 50 , MANUFACTURED IN ACCORDANCE WITH CARBON STRUCTURAL STEEL GRADES 45,40&50 TO GOST 1050-74.

a) CHEMICAL COMPOSITION AS PER GOST 1050-74

GRADE OF STEEL	CONTENT OF ELEMENTS %						REMARKS.
	C	Si	Mn	Cr	S	P	
				MAXIMUM			
45	0.42-0.50	0.17-0.37	0.50-0.80	0.25	0.040	0.035	Ref.Matl.
40	0.37-0.45	0.17-0.37	0.50-0.80	0.25	0.040	0.035	Alt.Matl.
50	0.47-0.55	0.17-0.37	0.50.0.80	0.25	0.040	0.035	Alt.Matl.

RESIDUAL CONTENT OF COPPER AND NICKEL SHOULD NOT EXCEED 0.25% EACH

b) MECHANICAL PROPERTIES UNDER NORMALISED CONDITION AS PER GOST 1050-74.

GRADE OF STEEL	ULTIMATE TENSILE STRENGTH Kgf/mm²	YIELD POINT Kgf/mm²	ELONGATION %	REDUCTION IN AREA %	IMPACT STRENGTH Kgm/cm²	HARDNESS BHN MAX	REMARKS
45	61	36	16	40	5	207	Ref.Matl.
40	58	34	19	45	6	197	Alt.Matl.
50	64	38	14	40	4	217	Alt.Matl.

1. DIMENSIONS WITH UNSPECIFIED TOLERANCES ARE TO BE OBTAINED AS PER ACCURACY CLASS 7 OST 1010.
2. NON-SQUARENESS OF SURFACE 'A' WITH THE AXIS OF THREAD 'B' AND OF SURFACE 6, WITH AXIS OF THREAD 'F' SHOULD NOT EXCEED 0.1mm.
3. SPECIFICATIONS FOR THREAD AS PER STANDARD 8202I-80.
4. SHARP EDGES SHOULD BE BLUNTED.
5. ALTERNATE MATERIAL : STEEL, GRADE 40 & 50 GOST 1050-74.
6. FACES MAY BE TURNED Φ35.5 C_5.
7. DURING FACING OF END FACE 'A' WITH A CUTTER, CUTTING-IN ON STEP 0.3mm, MAX IS ALLOWED ON CYLINDRICAL SURFACE. ABSENCE OF COATING ON INNER SURFACES OF THE COMPONENTS IS ALLOWED. THREAD CALIBRATION IS PERMITTED.
8. COATING: Cd9, CHROMATIZING AS PER 44.Л-104 WITH HYDROGEN EMBRITTLEMENT ELIMINATED. THREAD MAY BE CALIBRATED.
9. * DIMENSION FOR REFERENCE.
10. (A) 11. REPAIR SIZE DIMENSIONS ARE ADDED BASED ON LT. NO. 82847/OH/QAS/ED DT. 27 MAR95 AS FOLLOWS: REPAIR SIZE DIMENSIONS ARE ADDED WHERE INDICATED THUS ✓.

Sl.No.	R	REMARKS
✓1	2M27 × 1.5 ±1 PCD $26.0^{+0.124}_{-0.062}$	1. ALL OTHER CONDITIONS AS PER STD. DRG. 2. MARK REPAIR SIZE.

PILOT SAMPLE SHOULD BE APPROVED BY A H S P BEFORE BULK PRODUCTION

EST WT	TO BE STAMPED OR MARKED WHERE INDICATED THUS # (LETTERS)
0.056 Kg	

ALL SHARP EDGES AND CORNERS TO BE REMOVED UNLESS OTHERWISE STATED MACHINED CORNERS TO HAVE R OUTSIDE R INSIDE EQUIVALENT CHAMFERS ARE PERMISSIBLE

ISSUE	DATE	NATURE OF AMENDMENTS
A	5-9-95	REPAIR SIZE ADDED

DRN
CHD
TCD
APPD
DATE 09-4-86
SCALE 2 : 1
DIMENSIONS IN mm
TOLERANCE ON DIMNS UNLESS OTHERWISE STATED
ALL THREADS TO CONFORM TO

MATERIAL HEXAGON 32-5 GOST 8560-78. 45 GOST 1051-73

USED ON CB 447-01-1 CB3338-402-4

CONTROLLERATE OF INSPECTION (HEAVY VEHICLES) AVADI

TITLE
UNION PIPE

D S CAT NUMBER

DRAWING NUMBER 402-28-1

SIZE A2

DRAWING NUMBER
350 03

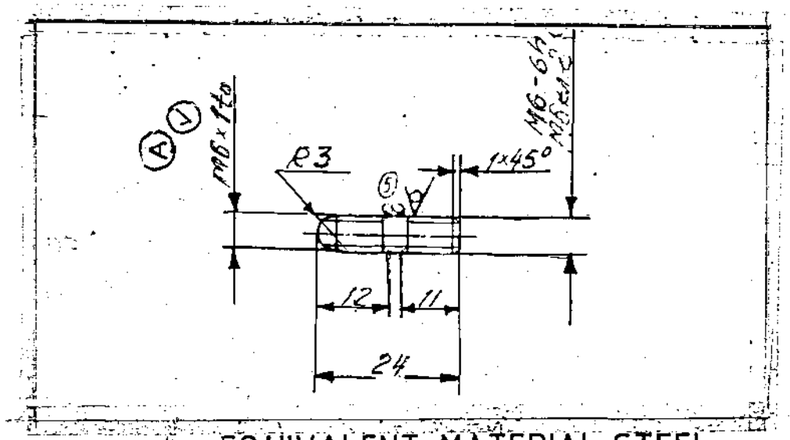

(D) EQUIVALENT MATERIAL STEEL
45C8 TO IS:1570

1. DELETED.
2. TECHNICAL REQUIREMENTS FOR THREADS AS PER STANDARD 82021-00.
3. DIMENSIONS WITH UNSPECIFIED TOLERANCES AND THE REST OF THE TECHNICAL REQUIREMENTS AS PER STANDARD 82052-00.
4. COATING: CADIUM 3, CHROMATIZING AS PER ЦУЛ-104 WITH SUB-SEQUENT ELIMINATION OF HYDROGEN EMBRITTLEMENT.
5. THE THREAD MAY BE MADE BY ROLLING WITH DIAMETER OF UN-THREADED PORTION WITH IN THE PITCH DIAMETER OF THREAD.
6. MECHANICAL DAMAGES OF THE CADIUM COATING SUCH AS SCRATCHES, NICKS AND DENTS ARE ALLOWED ON ASSEMBLY UNITS, PROVIDED THE STEEL IS NOT EXPOSED.
7. (B) ALTERNATE MATERIAL: STEEL GRADES 40 & 50 GOST 1050-74.
8. HARDNESS:- 27-32 HRC.

* ALT MATERIAL:-
STEEL 709 M40 (EN-19) TO
BS:- 970 PT.-1- 1983

PILOT SAMPLE SHOULD BE APPROVED BY A H S P BEFORE BULK PRODUCTION

EXPLANATORY NOTE:

Rz 80/ (√)

8. REFERENCE MATERIAL QUOTED:
COLD DRAWN SIZED ROUND BAR, 6.0 (-0.025)mm DIA TO GOST 7417-75 FROM HIGH GRADE SIZED STEEL NORMAL SURFACE QUALITY TO GOST 1051-73 AND MANUFACTURED IN ACCORDANCE WITH QUALITY CARBON STRUCTURAL STEEL GRADE 45 TO GOST 1050-74.
REFERENCE NOTE '7' ON ALTERNATE MATERIAL: QUALITY CARBON STRUCTURAL STEEL GRADE 40 AND 50 TO GOST 1050-74.

a) CHEMICAL COMPOSITION: AS PER GOST 1050-74.

GRADE OF STEEL	CONTENT OF ELEMENTS %						REMARKS
	C	Si	Mg	Cr	S	P	
				MAXIMUM			
45	0.42 - 0.50	0.17 - 0.37	0.50 - 0.80	0.25	0.040	0.035	Ref,Matl
40	0.37 - 0.45	0.17 - 0.37	0.50 - 0.80	0.25	0.040	0.035	Alt,Matl
50	0.47 - 0.55	0.17 - 0.37	0.50 - 0.80	0.25	0.040	0.035	Alt,Matl

RESIDUAL CONTENT OF COPPER AND NICKEL SHOULD NOT EXCEED 0.25% EACH

b) MECHANICAL PROPERTIES: AS PER GOST 1050-74.

GRADE OF STEEL	ULTIMATE TENSILE STRENGTH Kgf/mm²	YIELD POINT Kgf/mm²	ELONGATION %	REDUCTION IN AREA %	IMPACT STRENGTH Kgfm/cm²	HARDNESS BHN MAX	REMARKS
45	61	36	16	40	5	207	Ref,Matl
40	58	34	19	45	6	197	Alt,Matl
50	64	38	14	40	4	217	Alt,Matl

(A) 9. REPAIR SIZE DIMENSIONS ARE ADDED WHERE INDICATED THUS ⊘ BASED ON OVERHAUL SPECIFICATIONS PART III REPAIR DRAWINGS.

Sl.No.	R	REMARKS
1	M8 X 1.25 to	ALL OTHER CONDITIONS AS PER STD. DRG.
2	PCD = 7.188 +0.152 +0.082	

** Cb 306-08-8, Cb 306-09-10, Cb 401-03-6, Cb 3301-15-30, Cb 306-08-13, Cb 306-09-13, Cb 3308-04-24

ISSUE	DATE	NATURE OF AMENDMENTS
D	12-8-10	4th Alt.Comm.Meeting Minutes Point No.11 Dt: 26-10-09
C	25.8.08	USED ON NUMBERS ADDED
B	11.01.08	AUTHY:- MIN. OF ALT. COM. MEET. POINT No.-2.12 Dt.- 07-02-07
A	6.9.95	REPAIR SIZE DIMENSION ADDED

DRN
CHD
TCD
APPD
DATE 30-5-86
SCALE 1 : 1
DIMENSIONS IN mm
TOLERANCE ON DIMNS UNLESS OTHERWISE STATED
ALL THREADS TO CONFORM TO

MATERIAL: ROUND BAR GOST 7417-75 *
45 GOST 1051-73

USED ON ** (C) Cb 3301-15-44, Cb 3338-402-4, Cb 3329-01-11

CONTROLLERATE OF INSPECTION(HEAVY VEHICLES) AVADI

TITLE: STUD M6 x 24

D S CAT NUMBER

DRAWING NUMBER 350 03

EST WT 0.004 Kg

TO BE STAMPED OR MARKED WHERE INDICATED THUS # (LETTERS)

ALL SHARP EDGES AND CORNERS TO BE REMOVED UNLESS OTHERWISE STATED MACHINED CORNERS TO HAVE R OUT-SIDE R INSIDE EQUIVALENT CHAMFERS ARE PERMISSIBLE

COMMON TO V-92S2 ENGINE

(A-11)

SIZE A3

DRAWING NUMBER
350 - 15

SHEET No. 1 OF 1

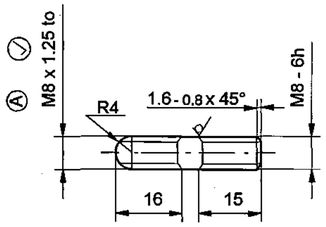

2. TECHNICAL REQUIREMENTS FOR THREADS AS PER STANDARD 82021-00.
3. DIMENSIONS WITH UNSPECIFIED TOLERANCES AND THE REST OF THE TECHNICAL REQUIREMENTS AS PER STANDARD 82052 - 00.
4. COATING : CADMIUM 3. CHROMATIZING AS PER ЦЦЛ- 104 WITH ELIMINATION OF HYDROGEN EMBRITTLEMENT.
5. THE THREAD MAY BE MADE BY ROLLING WITH THE DIAMETER OF UNTHREADED PORTION WITHIN THE PITCH DIAMETER OF THREADS.
6. MECHANICAL DAMAGES OF THE CADMIUM COATING SUCH AS SCRATCHES, NICKS AND DENTS ARE ALLOWED ON ASSEMBLY UNITS, PROVIDED THE STEEL IS NOT EXPOSED.
7. ALTERNATE MATERIAL : STEEL, GRADES 40 AND 50 GOST 1050-74.

(B) 8. HARDNESS :- 27 - 32 HRC.

8. EXPLANATORY NOTE :- (D)

MATERIAL QUOTED : - ROUND BAR GOST 7417-75 / 45 GOST 1051-73

ALTERNATE MATERIAL QUOTED : - 40 , 50 GOST 1050-74
PERTAINS TO SIZED COLD ROLLED OR COLD DRAWN STEEL WITH ROUND SECTION

40 , 45 AND 50 ARE GRADES OF STEEL GOST 1051-73

CHEMICAL COMPOSITION :

GRADE OF STEEL	CONTENT OF ELEMENTS IN %							
	C	Si	Mn	Cr	P	Cu	S	Ni
				MAXIMUM				
40	0.37 - 0.45	0.17- 0.37	0.50 - 0.80	0.25	0.035	0.25	0.04	0.25
45	0.42 - 0.50	0.17- 0.37	0.50 - 0.80	0.25	0.035	0.25	0.04	0.25
50	0.47 - 0.55	0.17- 0.37	0.50 - 0.80	0.25	0.035	0.25	0.04	0.25

MECHANICAL PROPERTIES :

GRADE OF STEEL	TENSILE STRENGTH Kgf /mm^2 (min)	YIELD POINT Kgf / mm^2 (min)	ELONGATION % (min)	REDUCTION IN AREA % (min)	IMPACT STRENGTH Kgf / mm^2 (min)
40	58	34	19	45	6
45	61	36	16	40	5
50	64	38	14	40	4

(A) 9. REPAIR SIZE DIMENSIONS ARE ADDED WHERE INDICATED THUS ✓ BASED ON OVER HAUL SPECIFICATION PART III REPAIR DRAWINGS.

SL.No.	R	REMARKS
1	M 10 x 1.5 to	ALL OTHER CONDITIONS AS PER STD. DRG.
2	PCD = $9.026^{+0.170}_{+0.095}$	

(B) * MATERIAL :- STEEL 709 M40 (EN-19) TO BS : 970 PT. - I -1983.

** Cb 306-01-36
(C) Cb 306-02-36
Cb 3301-15-44
Cb 3308-04-24
Cb 3321-14-1
Cb 306-01-20
Cb 306-02-20
Cb 406-05-3
Cb 3301-15-30

DRG. RE-INDIANISED BASED ON 350-15 ISSUE 'B'
COMMON TO V-92S2 ENGINE

(B. JAYAVELU), JTO(D)
31-01-2008

PILOT SAMPLE SHOULD BE APPROVED BY A H S P BEFORE BULK PRODUCTION.

EST. WT. (Kg) 0.012

TO BE STAMPED OR MARKED WHERE INDICATED THUS # (LETTERS)

ALL SHARP EDGES AND CORNERS TO BE REMOVED UNLESS OTHERWISE STATED MACHINED CORNERS TO HAVE R OUT-SIDE R INSIDE EQUIVALENT CHAMFERS ARE PERMISSIBLE.

ISSUE	DATE	NATURE OF AMENDMENTS
D	20-05-09	Authy: Third Alt. Comm. Minutes Point 5 Dated 27-02-2009.
C	25.8.08	USED ON NUMBERS ADDED
B	11.01.08	AUTHY:-MIN. OF ALT. COM. MEET POINT No. - 2 . 12 Dt.07.02.07
A	06.9.95	REPAIR SIZE DIMNS. ADDED.

DRN	Sd/=
CHD	Sd/=
APPD	Sd/=
DATE	02.05.87
SCALE:-	1 : 1

DIMENSIONS IN mm
TOLERANCE ON DIMNS UNLESS OTHERWISE STATED IS : 2102 - 69
ALL THREADS TO CONFORM TO

MATERIAL :- ~~ROUND BAR GOST 7417-75 45 GOST 1051-73~~ * (D)

USED ON :- Cb 3338-402-4 **

CONTROLLERATE OF QUALITY ASSURANCE (HEAVY VEHICLES) AVADI

TITLE :- STUD M8 x 35

D S CAT NUMBER

DRAWING NUMBER 350 - 15

F-11

SIZE A2

DRAWING NUMBER
350 - 37

SHEET No. 1 OF 1

Rz 80 (✓)

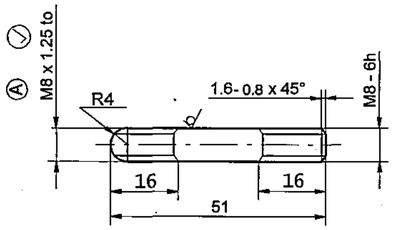

2. TECHNICAL REQUIREMENTS FOR THREADS AS PER STANDARD 82021-00.
3. DIMENSIONS WITH UNSPECIFIED TOLERANCES AND THE TECHNICAL REQUIREMENTS AS PER STANDARD 82052 - 00.
4. COATING : CADMIUM 3. CHROMATIZING AS PER ЦЦЛ-104 WITH SUBSEQUENT ELIMINATION OF HYDROGEN EMBRITTLEMENT.
5. THE THREADS SHOULD BE CUT
(B) 6. HARDNESS :- 27 - 32 HRC.

6. EXPLANATORY NOTE :-

MATERIAL QUOTED :- ROUND BAR $\frac{\text{GOST 7417-75}}{\text{45 GOST 1051-73}}$

STANDARD ROUND BAR AS PER GOST 7417-75 AS REQUIRED DIAMETER.

CHEMICAL COMPOSITION :- AS PER GOST 1051-73.

CONTENT OF ELEMENTS %							
C	Si	Mn	Cr	P	S	Cu	Ni
			MAXIMUM				
0.42 - 0.50	0.17 - 0.37	0.50 - 0.80	0.25	0.040	0.035	0.25	0.25

MECHANICAL PROPERTIES :-

TENSILE STRENGTH	Kgf/mm^2	(MIN)	= 61
YIELD POINT	Kgf/mm^2	(MIN)	= 36
ELONGATION %		(MIN)	= 16
REDUCTION IN AREA %		(MIN)	= 40

(A) 7. REPAIR SIZE DIMENSION ARE ADDED WHERE INDICATED THUS (✓) BASED ON OVERHAUL SPECIFICATION PART III REPAIR DRAWINGS.

SL.No.	R	REMARKS
1	M10 x 1.5 to	ALL OTHER CONDITIONS AS PER STD. DRG.
2	P C D = $9.026^{+0.0170}_{+0.090}$	

(D) EQUIVALENT MATERIAL STEEL 45C8 TO IS:1570

(B) * ALT. MATERIAL :- STEEL 709 M40 (EN-19) TO BS : 970 PT. - I -1983.

** Cb 3301-15-44
Cb 345-30-2

DRG. RE-INDIANISED BASED ON 350-37 ISSUE 'B'
COMMON TO V-92S2 ENGINE

(B. JAYAVELU), JTO(D)
31-01-2008

PILOT SAMPLE SHOULD BE APPROVED BY A H S P BEFORE BULK PRODUCTION.

EST. WT. (Kg)	TO BE STAMPED OR MARKED WHERE INDICATED THUS # (LETTERS)
0.02	

ALL SHARP EDGES AND CORNERS TO BE REMOVED UNLESS OTHERWISE STATED MACHINED CORNERS TO HAVE R OUT-SIDE R INSIDE EQUIVALENT CHAMFERS ARE PERMISSIBLE.

ISSUE	DATE	NATURE OF AMENDMENTS
D	12-8-10	4th Alt. Comm. Meeting Minutes Point No.11 Dt: 26-10-09 12-8-10
C	25-08-08	USED ON NUMBERS ADDED
B	13.01.08	AUTHY:-MIN. OF ALT. COM. MEET POINT No. - 2 . 12 Dt.07.02.07
A	06.10.95	REPAIR SIZE DIMNS. ADDED.

DRN	Sd/=
CHD	Sd/=
APPD	Sd/=
DATE	09.05.87
SCALE:-	1 : 1
DIMENSIONS IN mm	
TOLERANCE ON DIMNS UNLESS OTHERWISE STATED IS : 2102 - 69	
ALL THREADS TO CONFORM TO	

MATERIAL :- ROUND BAR GOST 7417-75 / 45 GOST 1051-73 *

USED ON :- (C) ** Cb 3338-404-7, Cb 3338-402-4, Cb 3301-15-30

CONTROLLERATE OF QUALITY ASSURANCE (HEAVY VEHICLES) AVADI

TITLE :- STUD M8 x 51

D S CAT NUMBER

DRAWING NUMBER 350 - 37

F-11

SIZE A2

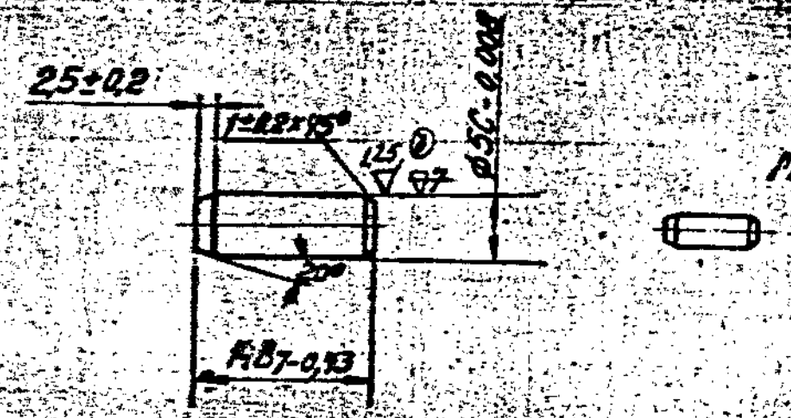

1. ~~Группа контроля II по ТУ 11.~~ СТ 11
2. Острые кромки затупить.
3. Покрытие Хим. Окс. прм.
4. Заменитель материалы стали марок 40 и 50 ГОСТ 1050-74

2. Sharp edges should be blunted.
3. Coating : Chemical oxidi. ing, oil finishing.
4. Alternate material : Steel, grades 40 and 50 GOST 1050-74.

(A) EQUIVALENT MATERIAL
STEEL 080 M 40 (EN 8) TO BS 970 OR
45 CB TO IS 1570

PILOT SAMPLE SHOULD BE APPROVED BY A M S P BEFORE BULK PRODUCTION

A	10 7 / 10	4 ALT. COMM. M19 MIN / POINT No 7 DT. 26-10-09	ALL SHARP EDGES AND CORNERS TO BE REMOVED UNLESS OTHERWISE STATED MACHINED CORNERS TO HAVE R OUTSIDE R INSIDE EQUIVALENT CHAMFERS ARE PERMISSIBLE
ISSUE	DATE	NATURE OF AMENDMENTS	

EST. MASS 0.0021 Kg

TO BE STAMPED OR MARKED WHERE INDICATED THUS + (LETTERS)

DRN — SCALE — 2 : 1

CHD — DIMENSIONS IN mm

TCD — TOLERANCE ON DIMS UNLESS OTHERWISE STATED

APPD — ALL THREADS CONFORM TO

DATE 15/8

MATERIAL — STEEL 45 GOST 1050-74

USED ON — CG 3338-402-4

CONTROLLERATE OF INSPECTION (HEAVY VEHICLES) AVADI

TITLE — ROUND PIN 5C x 14

D S CAT NUMBER

DRAWING NUMBER 352-31

EXPLANATORY NOTE:-

MATERIAL QUOTED:- STEEL 45 GOST 1050-74 STAMPING.
STEEL 45 : GRADE OF STEEL.

CHEMICAL COMPOSITION:-

CONTENT OF ELEMENTS %							
C	Si	Mn	Cr	P	S	Cu	Ni
				MAXIMUM			
0.42-0.50	0.17-0.37	0.50-0.80	0.25	0.035	0.040	0.25	0.25

MECHANICAL PROPERTIES:-

TENSILE STRENGTH Kgf/mm²	YIELD POINT kgf/mm²	ELONGATION %	REDUCTION IN AREA %	IMPACT STRENGTH kgf.m/cm²
-	MINIMUM			
61	36	16	40	5

ALTERNATE MATERIAL QUOTED:- STEEL GRADES 40 & 50 GOST 1050-74

CHEMICAL COMPOSITION:-

GRADE OF STEEL	CONTENT OF ELEMENTS %							
	C	Si	Mn	Cr	P	S	Cu	Ni
					MAXIMUM			
40	0.37-0.45	0.17-0.37	0.50-0.80	0.25	0.035	0.040	0.25	0.25
50	0.47-0.55	0.17-0.37	0.50-0.80	0.25	0.035	0.040	0.25	0.25

MECHANICAL PROPERTIES:-

GRADE OF STEEL	TENSILE STRENGTH Kgf/mm²	YIELD POINT kgf/mm²	ELONGATION %	REDUCTION IN AREA %	IMPACT STRENGTH kgf.m/cm²
	MINIMUM				
40	58	34	19	45	6
50	64	38	14	40	4

EFA_19 MAR 22

DRAWING NUMBER
354-22

(N SARAVANAN)
SSO-I
Dt. 22 Aug 2019

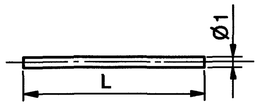

KVD No.	L mm	LIMIT DEVIATIONS mm	USED ON	
	50	± 1.5		
78705	60	± 1.5	Cb 3338-401-10, Cb 530-200	
78706	80	± 2	Cb 3334-00-39, ~~Cb 327-00-45~~ Cb 327-00-47-01 Cb 327-00-73	G
78707	100	± 2	Cb 3338-00-16 Cb 327-00-73 Cb 3335-00-33 ~~Cb 327-00-45, Cb 3335-00-24,~~ Cb 3342-00-8Cb	G H
78708 B C	120	± 2	Cb 419-00-4, Cb 310-00-7, Cb 20-22-00-7 Cb 322-00-4Cb	H
78709	150	± 2	Cb 327-00-47-01 Cb 327-00-73 Cb 3335-00-33 ~~Cb 327-00-45, Cb 3335-00-24~~ Cb 3334-00-27	G
78710	200	± 2	~~Cb 327-00-45,~~ Cb 3334-00-27 Cb 327-00-47-01 Cb 327-00-73	G
78711	260	± 3	Cb 3334-00-27, Cb 20-29-00-8	
A	300	± 3	Cb 3338-407-4, Cb 3329-00-13	
78712	350	± 3		
78713	420	± 3	Cb 411-00-41	
78714	500	± 3	~~Cb 327-00-45~~ Cb 327-00-47-01	G
	600	± 3.5		
	800	± 5		

ADDITIONAL REQUIREMENTS

FOR MANUFACTURE OF LOCK WIRE AS PER DRAWING 354-22

1. THE WIRE SHOULD BE PROVIDED WITH ZINC COATING. DIAMETER OF WIRE AFTER COATING SHOULD BE $1^{+0.06}_{-0.03}$ mm.
2. OVALITY OF WIRE SHOULD NOT EXCEED HALF OF THE TOLERANCE ON DIAMETER.
3. THE WIRE SHOULD BE MANUFACTURED FROM LOW CARBON ROLLED STEEL AS PER GOST 1050-74.
4. ULTIMATE RUPTURE STRENGTH OF ZINC PLATED WIRE SHOULD NOT BE LESS THAN 3.7 MPa (37 Kgf/mm^2).
5. THE WIRE SHOULD WITHSTAND NOT LESS THAN 7 BENDINGS THROUGH 100° AND NOT LESS THAN 25 TWISTINGS THROUGH 360°
6. THE SURFACE OF WIRE SHOULD NOT HAVE BLOW HOLES, CRACKS, MARKS, BACK FINS, OXIDE SPOTS, BURRS AND RUST THERE SHOULD NOT BE ANY UNCOATED AREAS ON THE WIRE.
7. ON WIRE FRACTURE, THERE SHOULD NOT BE ANY CRACKS, BACK FINS, FISSURES, BLISTERS, AND SHRINKAGE CAVITIES.
8. WIRE ZINC COATING SHOULD BE BOUND TO THE STEEL WHEN WOUND ON CYLINDER WITH DIAMETER EQUAL TO WIRE FIVE FOLD DIAMETER, THE WIRE SHOULD NOT HAVE ANY PEELINGS AND FISSURINGS OF ZINC COATING.

EXPLANATORY NOTE :-

REFERENCE MATERIAL QUOTED :- LOW CARBON STEEL TO GOST 1050-74.

CHEMICAL COMPOSITION %

GRADE	C	Si	Mn	Cr	P	S	Cu	Ni
				MAXIMUM				
15	0.12 - 0.19	0.17 - 0.37	0.35 - 0.65	0.25	0.035	0.040	0.25	0.25

MECHANICAL PROPERTIES

1. ULTIMATE TENSILE STRENGTH Kgf/mm^2 (min) = 38
2. YIELD POINT Kgf/mm^2 (min) . . . . . = 23
3. PERCENTAGE ELONGATION % (min) . . . . . = 27
4. REDUCTION IN AREA % (min) . . . . . = 55
5. HARDNESS BHN (MAX) . . . . . = 149

D ** ITEM USED IN VARIOUS LENGTHS ON VARIOUS ASSEMBLIES OF V46-6, V92-S2 & UTD-20 ENGINE.

E EQUIVALENT MATERIAL IS: 549.

Cb3334-08-2 L
Cb 3312-00-22
Cb 3312-00-15 K
Cb 3308-00-23
Cb 3308-00-17
Cb 310-44
Cb 310-00-7 J
CQA(HV)5.06.607E F
Cb 20-06-00-2

PILOT SAMPLE SHOULD BE APPROVED BEFORE BULK PRODUCTION.

EST. WT.	TO BE STAMPED OR MARKED WHERE INDICATED THUS # (LETTERS)
—	

ALL SHARP EDGES AND CORNERS TO BE REMOVED UNLESS OTHERWISE STATED MACHINED CORNERS TO HAVE R OUT-SIDE R INSIDE EQUIVALENT CHAMFERS ARE PERMISSIBLE.

ISSUE	DATE	NATURE OF AMENDMENTS
L	8.03.22	DC(II)No.CQA(HV)/ENGV46-6/C-0001/2022 Dt.5.2.22
K	04.01.22	USED ON NUMBER ADDED.
J	31.07.21	USED ON NUMBER ADDED.
H	20.09.19	USED ON NUMBER ADDED.
G	08.08.19	USED ON NUMBER ADDED.
F	15.7.15	Pt.11 of 7th Alt. Comm. Meeting Dt.11.4.12
E	08.7.10	4 th Alt. Comm. Meeting Minutes. Point No.3 Dt. 26.10.09
D	28.8.08	USED ON NUMBER ADDED.
C	30.6.01	AUTHY 90211/AHSP/ED dt. 27.3.01
B	15.1.02	AUTHY Lt.No. 110026 / IND-III / 509 dt. 12.1.02.
A	15.2.88	AUTHY NOTN No. BK 81-406

DRN	Sd/=
CHD	Sd/=
APPD	Sd/=
DATE	18.03.86
SCALE:-	—
DIMENSIONS IN mm	
TOLERANCE ON DIMNS UNLESS OTHERWISE STATED IS : 2102 - 69	
ALL THREADS TO CONFORM TO	

MATERIAL :- ———

USED ON :- Cb 20-35-00-5
Cb 3338-402-4Cb
SEE TABLE **

CONTROLLERATE OF QUALITY ASSURANCE (HEAVY VEHICLES)
AVADI

TITLE :- LOCK WIRE

D S CAT NUMBER

DRAWING NUMBER 354-22

DRG. RE - INDIANISED BASED ON RUSSIAN ORIGINAL ISSUE - NIL.

COMMON TO V46-6, V92S2 & UTD-20 ENGINES

SIZE A2

DRAWING NUMBER
356 51

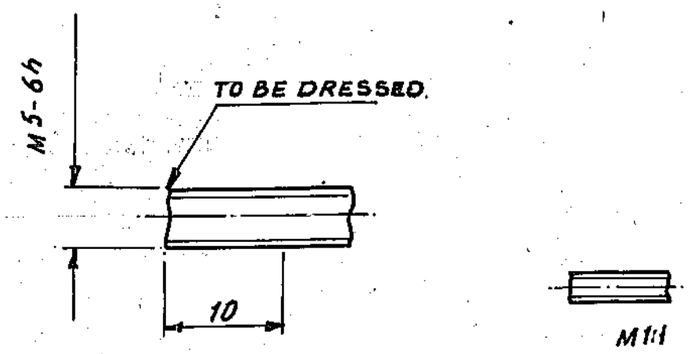

1. THE REST OF THE TECHNICAL REQUIREMENTS AS PER STANDARD 82052-00.

2. TO BE CUT FROM THE BAR AS REQUIRED AFTER INSTALLATION INTO COMPONENT OR ASSEMBLY.

3. SHARP EDGES SHOULD BE BLUNTED.

EXPLANATORY NOTE

4. REFERENCE MATERIAL QUOTED:

LEADED BRASS ROD PRESSURE TREATED GRADE ЛС 59-1 TO GOST 15527-70

a).CHEMICAL COMPOSITION

GRADE OF BRASS	CONTENT OF ELEMENTS %						
	BASIC ELEMENTS		ADMIXTURES MAXIMUM				
	Cu	Pb	Fe	As	Bi	P	TOTAL
ЛС59-1	57.0 60.0	0.8 1.9	0.5	0.010	0.003	0.02	0.75

1 THE ADMIXTURES NOT INDICATED IN TABLE ARE CONSIDERED AS COMMON ADMIXTURES.

2. THE ALLOY OF GRADE ЛС59-1 THE CONTENT OF NICKEL UP TO 1% IS ALLOWED (DUE TO COPPER CONTENT)

3. THE TOTAL ADMIXTURES OF TIN AND SILICON SHOULD NOT EXCEED 0.5 %

PILOT SAMPLE SHOULD BE APPROVED BY A H S P BEFORE BULK PRODUCTION

EST WT 0.0024 Kg

TO BE STAMPED OR MARKED WHERE INDICATED THUS # (LETTERS)

ALL SHARP EDGES AND CORNERS TO BE REMOVED UNLESS OTHERWISE STATED MACHINED CORNERS TO HAVE R OUTSIDE R INSIDE EQUIVALENT CHAMFERS ARE PERMISSIBLE

ISSUE	DATE	NATURE OF AMENDMENTS

DRN	
CHD	
TCD	
APPD	
DATE	24-4-'85
SCALE: 2 : 1	
DIMENSIONS IN mm	
TOLERANCE ON DIMNS UNLESS OTHERWISE STATED	
ALL THREADS TO CONFORM TO	

MATERIAL: BRASS ЛС 59-1 GOST 15527-70

USED ON: Сб 3338-402-4 СБ 447 05 СБ20-63-07

CONTROLLERATE OF INSPECTION (HEAVY VEHICLES) AVADI

TITLE: WOOD SCREW LOCK

D S CAT NUMBER

DRAWING NUMBER 356 51

A-11

SIZE A3

DRAWING NUMBER
356-57

Rz 80 (✓)

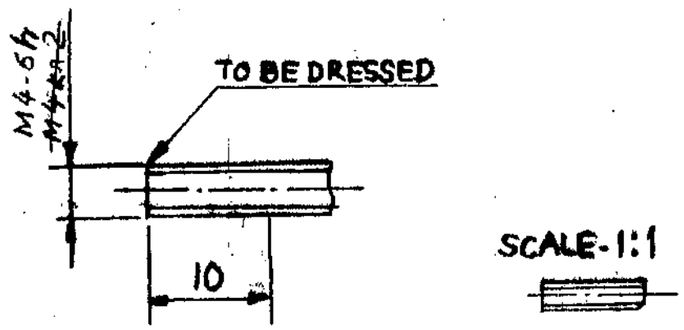

~~1.~~
~~2.~~
3. OTHER TECHNICAL REQUIREMENTS SHOULD BE CARRIED OUT AS PER STANDARD 82052-00.

4. TO BE CUT FROM THE BAR TO SUIT THE PLATE AFTER SETTING IN COMPONENT OR UNIT.

5. SHARP EDGES ARE TO BE BLUNTED.

(A) 6. ALTERNATE MATERIAL; Л63 GOST 15527-70.

COMMON TO V92S2 ENGINE.

Cb 3312-92-6 (B)

PILOT SAMPLE SHOULD BE APPROVED BY A H S P BEFORE BULK PRODUCTION

EST. WT. 0.0011 Kg

TO BE STAMPED OR MARKED WHERE INDICATED THUS # I LETTERS)

ALL SHARP EDGES AND CORNERS TO BE REMOVED UNLESS OTHERWISE STATED MACHINED CORNERS TO HAVE R OUT SIDE R INSIDE EQUIVALENT CHAMFERS ARE PERMISSIBLE.

ISSUE	DATE	NATURE OF AMENDMENTS
B	05.1.22	USED ON NUMBER ADDED.
A	11.7-96	AUTHY. NOTN. NO. BK87-300

DRN
CHD
TCD
APPD
DATE 11-07-96
SCALE: 2:1
DIMENSIONS IN mm
TOLERANCE ON DIMNS UNLESS OTHERWISE STATED IS: 2102-69.
ALL THREADS TO CONFORM TO

MATERIAL:- BRASS AC 55-1, GOST 15527-70.

USED ON:- CB [illegible] CB 3338-108, CB 3338-400, CB 3338-402-4, CB 3312-92

CONTROLLERATE OF QUALITY ASSURANCE (HEAVY VEHICLES) AVADI.

TITLE
LOCKING WOOD SCREW

D S CAT NUMBER

DRAWING NUMBER
356-57

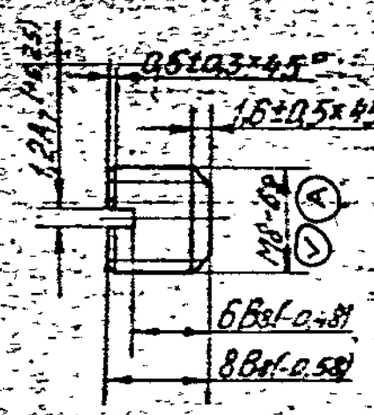

1. Inspection group V TT-11.
2. Radius from milling cutter R30mm, minimum is allowed to be left after cutting of slot for screw driver eccentricity of slot relative to the axis of plug should not exceed 0.25 mm.
3. The rest of the Technical requirements – as per Standard 82052-00.
4. The component may be manufactured from bar A16T GOST 21488-76.
5. Sharp edges are permitted on the surfaces of slot
7. REPAIR SIZE DIMENSIONS ARE ADDED WHERE INDICATED (A) THUS (✓) BASED ON OVERHAUL SPECIFICATIONS PART III REPAIR DRAWINGS. * *

PILOT SAMPLE SHOULD BE APPROVED BY A H S P BEFORE BULK PRODUCTION

			EST MASS 0.0027 Kg	TO BE STAMPED OR MARKED WHERE INDICATED THUS # (LETTERS)
(A)	A	1.1.96	REPAIR SIZE DIMNS ADDED	ALL SHARP EDGES AND CORNERS TO BE REMOVED UNLESS OTHERWISE STATED MACHINED CORNERS TO HAVE R OUTSIDE R INSIDE EQUIVALENT CHAMFERS ARE POSSIBLE
ISSUE	DATE		NATURE OF AMENDMENTS	
DRN			SCALE – 2:1	MATERIAL – BRASS ЛC59-1 GOST 15527-70 / USED ON – CB 3338-402-4
CHD			DIMENSIONS IN mm	CONTROLLERATE OF INSPECTION (HEAVY VEHICLES) AVAD
TCD			TOLERANCE ON DIMNS UNLESS OTHERWISE STATED	TITLE – PLUG
APPD			ALL THREADS CONFORM TO	DS CAT NUMBER / DRAWING NUMBER 356-63-3
DATE				

6. EXPLANATORY NOTE:

Material Quoted: Brass Лc 59-1 GOST 15527-70
Лc 59-1 : Grade of brass, hard drawn
(⊗) Alternative material Quoted: Bar A 16 T GOST 21488-76
A 16 : Grade of aluminium alloy
T : Hardened and naturally aged.

Chemical composition (as per GOST 15527-70.)

Copper	= 57.0-60.0	Iron	= 0.5 (max)
Lead	= 0.8-1.5	Antimony	= 0.010 (max)
Zinc	= Remaining	Bismuth	= 0.003 (max)
		Phosphorus	= 0.02 (max)
		Tin	= 0.30 (max)
		Total	= 0.75 (max)

Mechanical properties (as per GOST 2060-73)

ultimate tensile strength kgf/mm² (min) = 50
Relative elongation % (min) = 5

(⊗) Chemical Composition (as per GOST 4784-74)

Basic constituent = Aluminium
Copper = 3.8-4.9
Magnesium = 1.2-1.8
Manganese = 0.3-0.8

Impurities (maximum)

Iron = 0.5
Silicon = 0.5
Nickel = 0.1
Zinc = 0.3
Titanium = 0.1
Other impurities = 0.05 each

(⊗) Mechanical properties: (as per GOST 21488-76)

Tensile strength kgf/mm² = 40 (min)
Yield Point kgf/mm² = 28 (min)
Elongation % = 10 (min)

* *

(A)

SL No	R	REMARKS
1	M 10 – 6g	ALL OTHER CONDITIONS AS PER STD DRG.

356-84-1

Восстановленный подлинник №1.

Покрытие Ц3.хр по ЦЛ-483-82 с удалением водородной хрупкости.

1. В тропическом исполнении покрытие КД9.хр по ЦЛ-569-84 с удалением водородной хрупкости.
2. Заготовка должна соответствовать требованиям пункта 1.17 раздела 1 ГОСТ 1759-70 для нормальной степени точности.

356-84-1				
Болт М6×20	Лит	Масса	Масштаб	
	Б	0,007	1:1	
	Лист	Листов 1		
Заготовка Болт М6-6g×20.88.35 ГОСТ 7798-70				

356-84-1

Reduced original No: 1

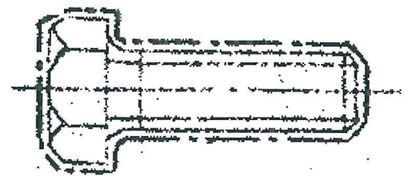

Coating Zn 3Cr as per instruction ЦЛ-483-82 by removevel of hydrogen embrittlement.

1. In tropicalized construction, coating kd gcr as per instruction ЦЛ-569-84 by removal of hydrogen embrittlement.
2. Blank should comply with requirement of point 1.17 of section 1 of gost 1759-70 for standard degree of accuracy.

Bolt M6 x 20	356-84-1
Blank Bolt M6-6g x 20.88.35 Gost 7798-70	