THIRD ANGLE PROJECTION.

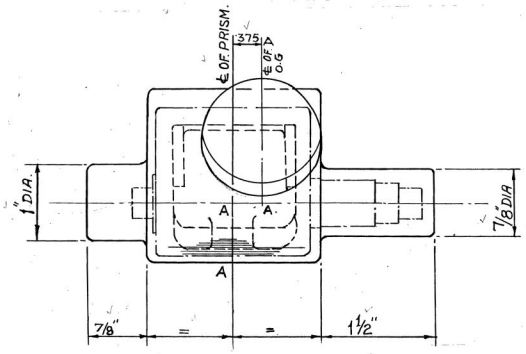

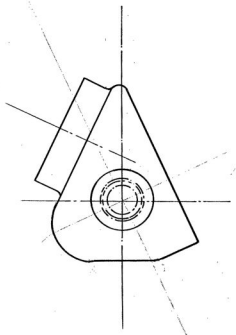

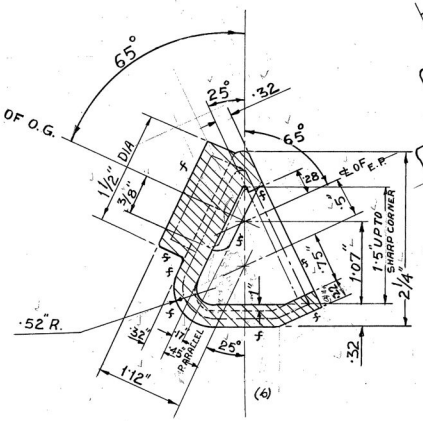

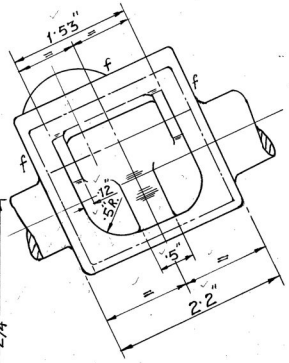

SECTION ON A.A.A.A.

NOTE:- MACHINING ALLOWANCE IS INCLUDED IN THE DRAWING BUT SHRINKAGE ALLOWANCE IS NOT INCLUDED.

SURFACES MARKED f TO BE MACHINED

COMPONENT DRAWING SHOWN IN CHAIN DOTTED LINES.

IMPORTANT DIMENSIONS MARKED THUS ⊕.

INFORMATION MARKED THUS † TO BE MARKED ON.

ORDNANCE FACTORY. DEHRA DUN.	DR:- Sd. PSINGH, Sd. G. LITHI TR:- Nkant CH:- TRACED DRG.	6.4.63. DATE.	P-4/98	DIRECTOR FIRE CONTROL No 7 MK-5 (CASED) BOX (CASTING DRAWING.)	D.A. No 103/65-(2) DIMN. ·22" WAS ·32" DT. 21-12-66 D.A. No 15/66-(2) DIMN. "A" DELETED. DT. 27-1-66 D.A. No 76/77 X	MATL. GUNMETAL. (NON MAGNETIC) STA-7/CG-2 IS:306
	APPROVED VIDE C.I OF I LETTER No. 081962 DT. 20.5.63.		PART. No. O.S. 34615		AMENDMENTS.	SHEETS. 1. / SHEET. No. 1. / DRAWING. No. O.D.D./C/274/1

TREAT.