RFI. SK.-4312 *12

MEDIUM STRESSED
GR.B.

NOTE:- 5 TO 10 Nos. OF SAMPLE MUST BE APPROVED BY RFI BEFORE BULK SUPPLY.

DC(RF) & DATE	DETAILS OF AMENDMENTS & AUTHORITY	SIGN.
04/03/98	AT TOP VIEW FOR R10 READ R6, FOR R7 READ R5.25, DIMN. 9.0 NEWLY ADDED. AT BOTTOM VIEW FOR 22.0 READ 22.5. DRG. AMENDED ACCORDINGLY & ADVANCED TO RFI SK. 4312*8. AUTHORITY:- VIDE MEMO No. 51/JWM/DT. GENERAL DT. 25-8-98.	JWM/ASSY
04/09/98 DT. 15-12-98	DRG. REVISED. AUTHORITY:- (1) MEMO FROM JWM/DT TO JWM/D.O. No. 3/2/JWM/DT (GEN) DT. 23-11-98. (2) MINUTES OF THE MEETING IN THE OFFICE OF JGM/PL ON 21-11-98. DRG. AMENDED ACCORDINGLY & ADVANCED TO RFI SK. 4312*9	JWM/ASSY & DO
04/10/99 6-4-99	DRG. REVISED. TWO BRIDGE INSIDE THE CAVITY DELETED. DRG. AMENDED ACCORDINGLY. DRG. No. ADVANCED TO RFI SK. 4312*10	JWM/DO
30-6-03	IN NOTE 2, "WITH 190-230 HV" ADDED. DRG. No. ADVANCED TO RFI. SK. 4312*11. AUTHY:- LETTER No. 8C(IM)/IC/QUALITY REVIEW DT. 04-3-03.	
04/003/05 17-2-05	A VIEW SHOWING THE POSITION OF MANUFACTURER'S IDENTIFICTION MARK ADDED. THE DRG. NO. ADVANCED TO RFI SK 4312*12	

UNTOLERATED DIMENSIONS ARE AS PER STD. IS: 11166-1984 CLASS-II.

NOTES FOR CONDITION OF SUPPLY

1) ALL DIMENSIONS ARE IN M.M.
2) CASTINGS TO BE SUPPLIED IN ANNEALED CONDITION WITH 190-230 HV.
3) ALL SHARP CORNERS ARE TO BE REMOVED.
4) CASTINGS SHOULD BE FREE FROM DEFECTS LIKE CRACKS, HOT-TEARS, COLD SHUTS ETC. AND SURFACE FINISH SHOULD BE SMOOTH.
5) VISUAL EXAMINATION SHOULD CONFORM TO CLAUSE 0-1 AND 0-2 OF SPECN. IS: 10343-1989 AND A.Q.L (FOR A-1.5, B-1.5, C-2.5) OF IS: 2500 PART-I 1992, INSPECTION LEVEL-III.
6) DECARBURISATION SHOULD NOT BE MORE THAN 2% OF THE THICKNESS OF THE CASTINGS.
7) ALL CASTINGS AND REPRESENTATIVE SAMPLES SHALL BE LEGIBLY MARKED WITH IDENTIFICATION MARK.
8) TEST SAMPLES SHOULD BE CAST FROM THE SAME MATERIAL USED FOR MANUFACTURING OF THE CASTINGS AND BE MADE TO SATISFY SPECN. IS:10343-1989 OR BS:3146 PART-I 1974.
9) MAGNETIC TEST FOR CRACK DETECTION SHOULD BE CARRIED OUT IN SAMPLES AS PER INSPECTION LEVEL-IV AT AQL 0.65 AS PER IS: 2500 PART-1, 1992.
10) RADIOGRAPHIC ACCEPTANCE STD. AS PER RFI. SK. No. 6274

DATE	AMENDMENTS	SIGN.
25.8.96	Φ6 HOLE AND 8.4 DIMENSIONS TO BE DELETED FOR DIMENSIONS 5.2 IN ELEVATION AND R-7 IN PLAN VIEW READ DIMN. 4.8 & R-10 RESPECTIVELY. DIMENSION 170.6 TOTAL LENGTH NEWLY ADDED. AT ENLARGED VIEW OF BOW FOR R19.0 READ R10.0 DRG. No. ADVANCED TO RFI SK: 4312*7.	JWM/SC
25.10.95	MATL. FOR BS: 3146 Pt.I: 1974 TYPE CLA. GRADE-1C. READ BS: 3146 Pt.I: 1974 TYPE. CLA. I. GRADE 'C'. DRG. No. ADVANCED TO RFI SK: 4312*6	SD/P.K.SAHA AWM/Q.C.
3.7.95	DIMN. OF RIB 4.0 IS SHOWN TO AUXILIARY VIEW IN PLACE OF PLAN VIEW. THE SAME DELETED FROM PLAN VIEW. THE ORIGIN OF 11°30' IS 2.5 OFF SET FROM THE DATUM LINE IN THE MAIN VIEW. AUXILIARY VIEW OF "IN SIDE OF BOW" IS AMENDED ACCORDINGLY. LENGTH OF 'INSIDE OF BOW' WILL BE 52 FOR 53. DRG. No. ADVANCED TO RFI. SK. 4312*5	SD/- JWM/D.O
4-5-95	DRG. REVISED AS PER RD/SK/273-SP DRG. No. ADVANCED TO RFI SK. 4312*4	SD/- JWM/D.O.

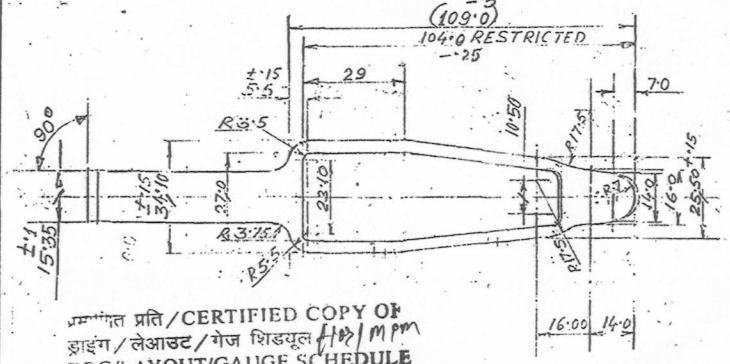

प्रमाणित प्रति / CERTIFIED COPY OF ड्राइंग / लेआउट / गेज शिडयूल / DRG/LAYOUT/GAUGE SCHEDULE दिनांक / AT THIS DATE 24.08.98 सी डी डी / CDD राइफल फैक्टरी, ईशापुर RIFLE FACTORY, ISHAPORE.

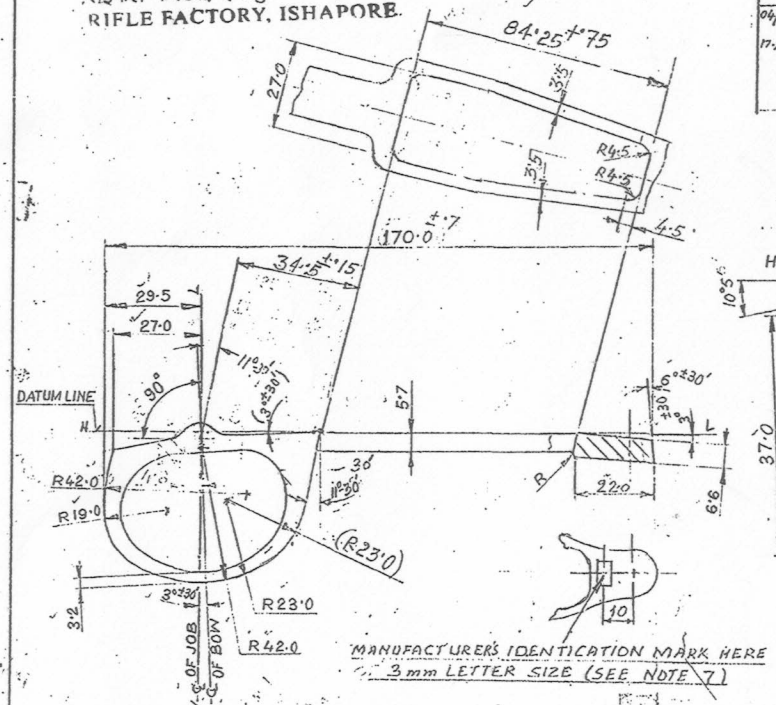

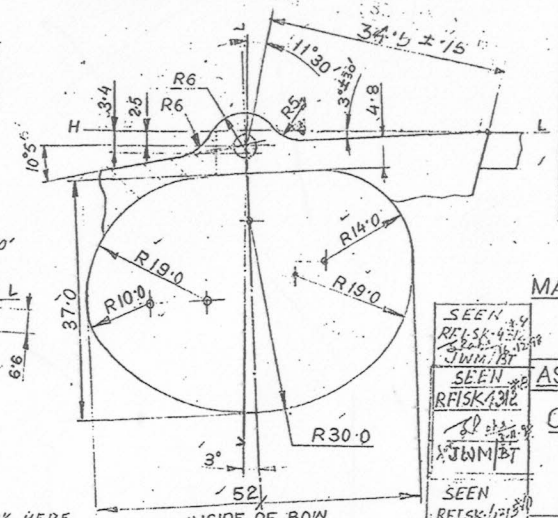

INSIDE OF BOW
SCALE - 2:1

MATERIAL:- BS: 3146 Pt I: 1974, TYPE CLA. I - GRADE-C. (SEE NOTE 2)

ASSY. DRG. No.

ORDNANCE FACTORY BOARD RIFLE FACTORY ISHAPORE	1996	NAME	DATE
	DRN.		25.7.96
	TCD.		
	CKD.		
	APPVD.		4.9.96
SCALE-1:1 (2:1)	DRG. No.		
0.315 SPORTING RIFLE GUARD TRIGGER INVESTMENT CASTING	R.F.I.SK.-4312*12		
	SHT.-1 OF-1		

SEEN RFI.SK.4312*9 JWM/DT

SEEN RFISK.4312*8 JWM/DT

SEEN RFISK.4312*10 JWM/DT

Wt. 172 gms (Ref.- JT.GM/PL. letter No. 56/PLP/5-56 dt. 26-11-2011)