PROVISIONAL

प्रमाणित प्रति / CERTIFIED COPY OF
ड्राइंग / लेआउट / गेज शिडयूल
DRG/LAYOUT/GAUGE SCHEDULE
दिनांक / AT THIS DATE 9-7-18
सी डी डी / CDD
राइफल फैक्टरी, ईशापुर
RIFLE FACTORY, ISHAPORE

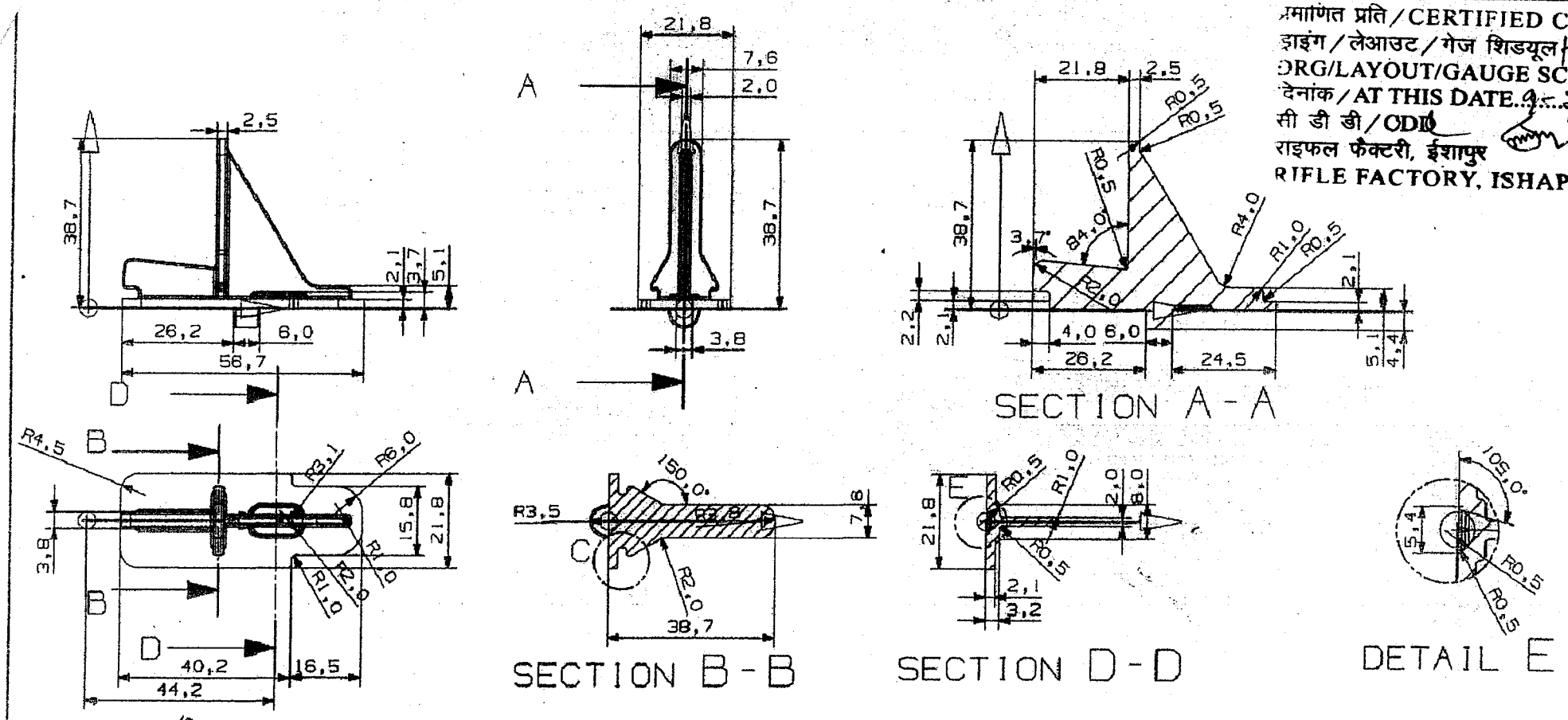

28-09-15	IIC/006/15	
DATE	DC RFI NO	SIGN

MATERIAL:- NYLON 6:6

COLOUR:- BLACK.
STRESS RELIEVING:- 120°C FOR 12 HOURS

ASSY. DRG. NO. - AR/024-RFI	2015	NAME	DATE
INDIAN ORDNANCE FACTORIES RIFLE FACTORY ISHAPORE	DESIGNED		
	DRAWN		
	CHECKED		
	APPROVED		
PLATE BOTTOM	SCALE 1:1	DRAWING No. AR/024/03 RFI	