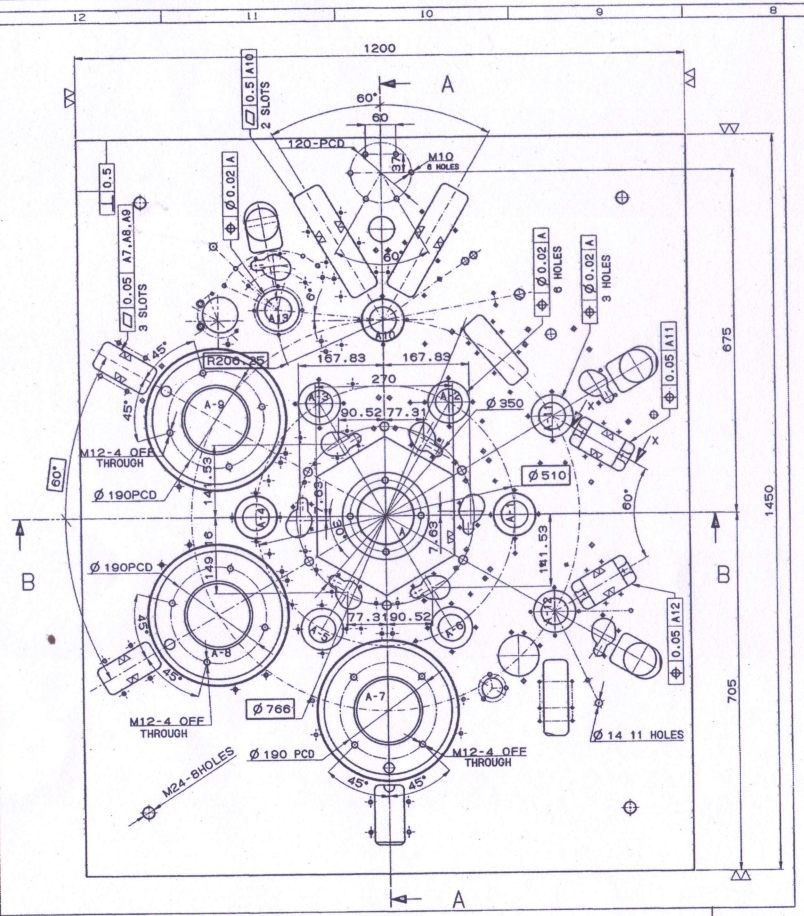

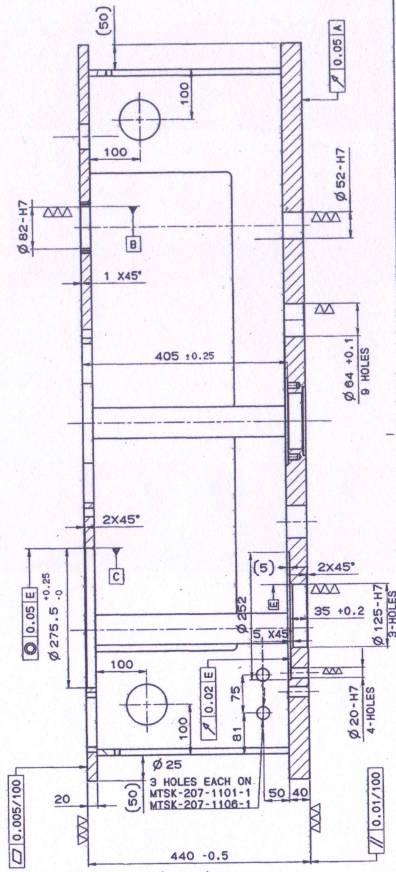

A - A

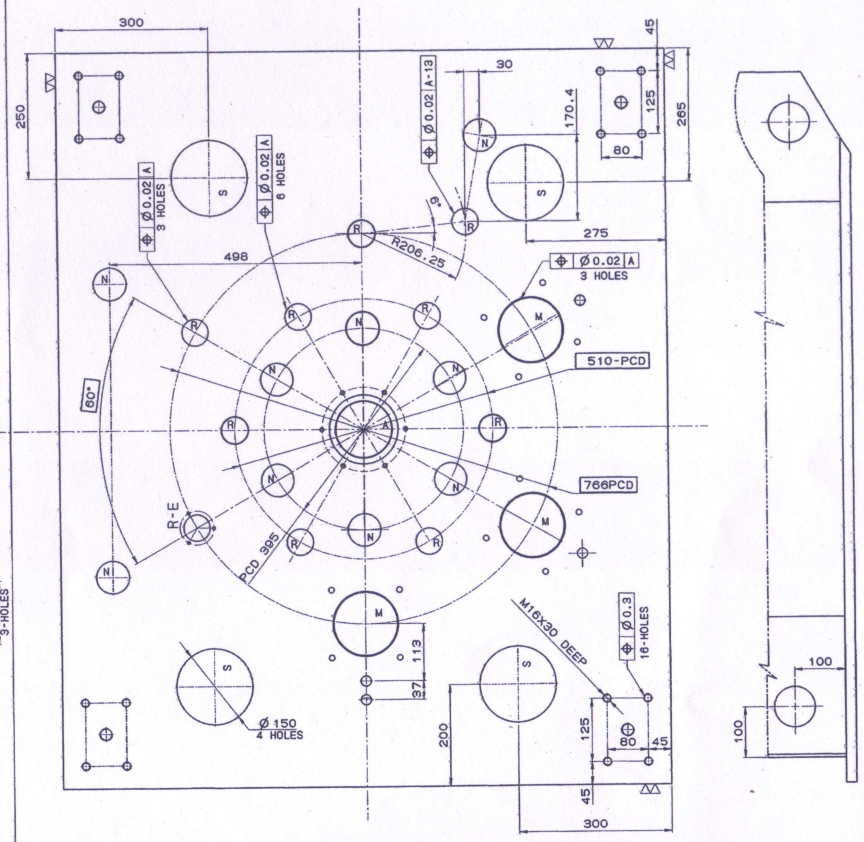

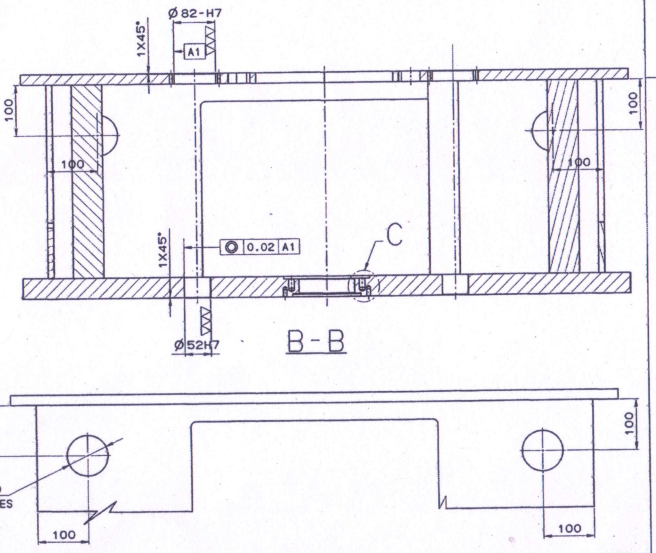

B - B

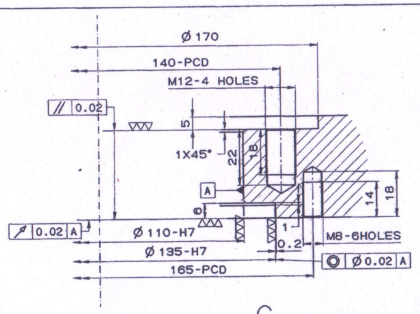

DETAIL AT C

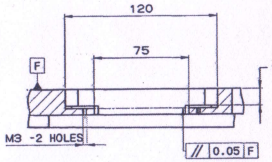

SECTION X-X
(A11 & A12)

NOTE: 1) GRINDING OPERATION IS MUST ON TOP & BOTTOM SURFACES
2) PHOSPHATING OR SUITABLE RUST-PROOF COATING TO BE DONE ON TOP & BOTTOM SURFACES
3) POWDER COATING TO BE DONE ON REMAINING SURFACES(COLOUR:SIEMENS GREY)
4) DIMENSIONS SHOWN IN RECTANGLE ARE BASIC AND TOLERANCES OF THESE DIMENSIONS ARE GOVERNED BY POSITIONAL TOLERANCE OF ASSOCIATED FEATURE PARAMETERS

**TO BE MANUFACTURED FROM MTSK-207-1100-41

▽▽(▽▽▽)

No.OFF	DESCRIPTION	PART No.	MATERIAL	STANDARD	DIMENSIONS	REMARKS
1	FRAME		**			

GENERAL TOLERANCE	
LINEAR DIMENSIONS	
0-6	±0.1
6-30	±0.2
30-120	±0.3
120-315	±0.5
315-1000	±0.8
1000-2000	±1.2
ANGULAR DIMENSION	
1-10	±1°
10-50	±30'
50-120	±20'
>120	±10'
VALUE IN "um"	
~	>25
▽	6-25
▽▽	1.6-6
▽▽▽	0.025-1.6
▽▽▽▽	<0.025

NOMINAL SIZE & FIT	DEVIATION
Ø 40-H7	+0.025 / 0
Ø 135-H7	+0.040 / 0
Ø 125-H7	+0.040 / 0
Ø 110-H7	+0.035 / 0
Ø 52-H7	+0.030 / 0
Ø 8-H8	+0.022 / 0
Ø 82-H7	+0.035 / 0
Ø 20-H7	+0.021 / 0

No.OFF	DWG. No. OF ASSOCIATED PART	INDEX	ALTERATION	DATE	NAME

FRAME
PEDESTAL ASSEMBLY
CASE GAUGING M/C(5.56mm)

MACHINE TOOL PROTOTYPE FACTORY, AMBERNATH

Design Office

SCALE	NTS	
DRAWN	13/4/12	
CHECKED		
APPROVED		
REPLACED BY		
REPLACED FOR		

DRAWING No. MTSK-207-1100-11 (SHEET1/3)

THE COPYRIGHT OF THESE DRAWINGS AND ATTACHMENTS TO THE INDIAN ORDNANCE FACORIES, MINISTRY OF DEFENCE, GOVT. OF INDIA THEY SHOULD NOT BE COPIED,RE-PRODUCED IN ANY WAY OR THE INFORMATION CONTAINED THEREIN MADE AVAILABLE TO UNAUTHORISED PERSONES WITHOUT THE WRITTEN PERMISSION OF THE DIRECTOR OF ORDNANCE FACTORIES.