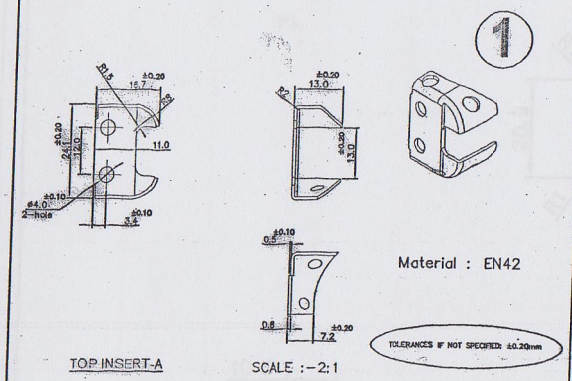

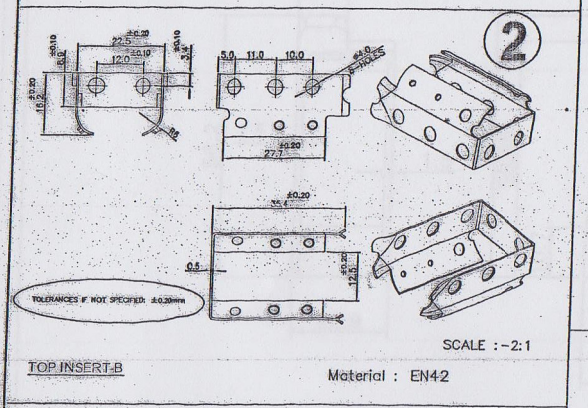

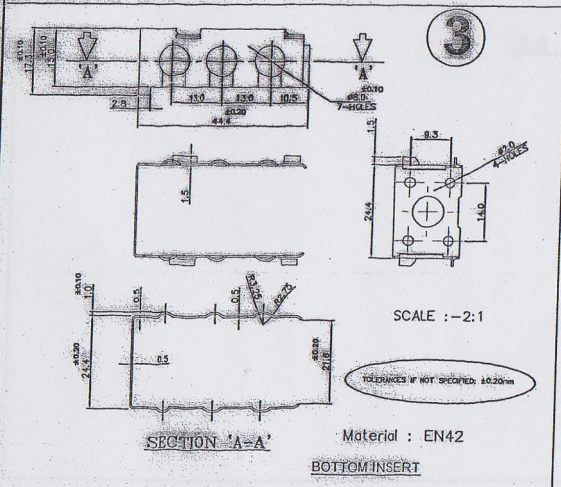

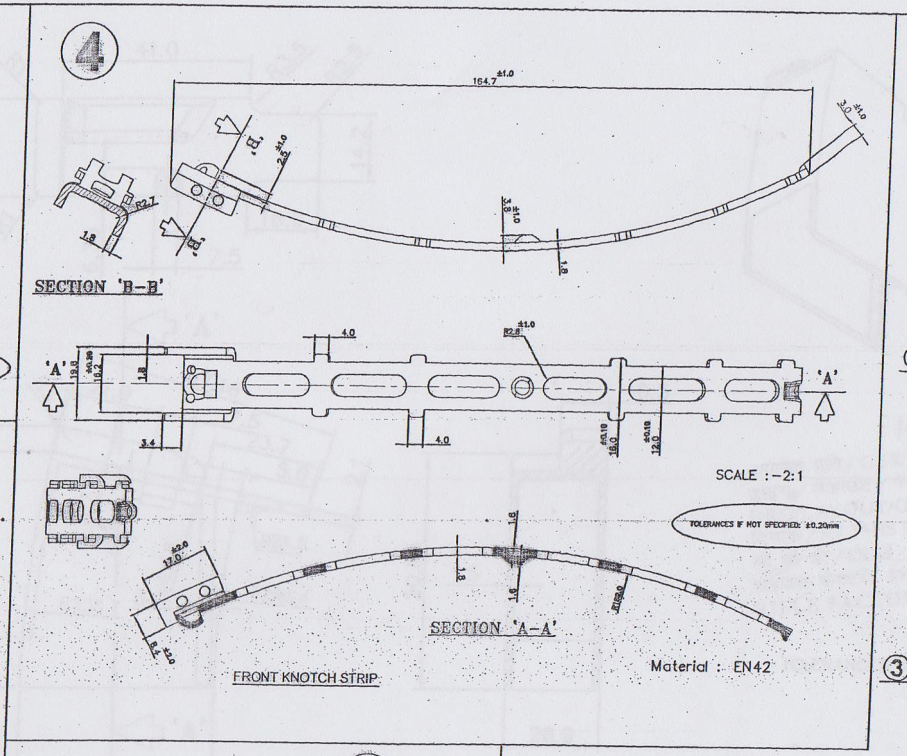

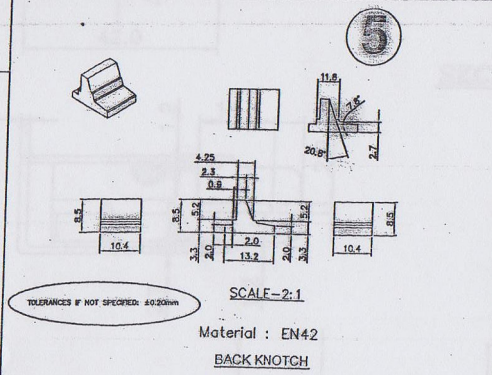

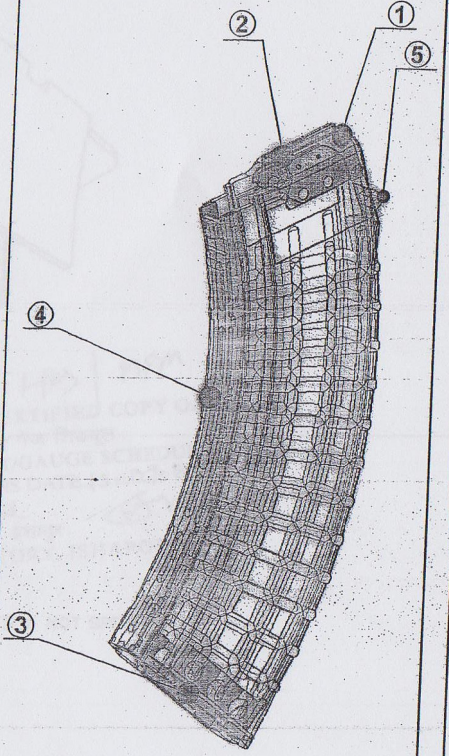

H03/MPM
प्रमाणित प्रति / CERTIFIED COPY Or
ड्राइंग / लेआउट / गेज शिडयूल
DRG/LAYOUT/GAUGE SCHEDULE
दिनांक / AT THIS DATE 12-09-18
सी डी ओ / ODC
राइफल फैक्टरी, ईशापुर
RIFLE FACTORY, ISHAPORE

INDIAN ORDNANCE FACTORIES
RIFLE FACTORY
ISHAPORE

CASE MAGAZINE MOULDING
7.62 mm ASSAULT RIFLE
(GHAATAK)

SCALE 1:1

2018	NAME	DATE
DESIGNED		
DRAWN		08/09/18
CHECKED		11/9/18
APPROVED		

DRAWING No.
AR/024/01-RFI
SHEET-2 OF-2