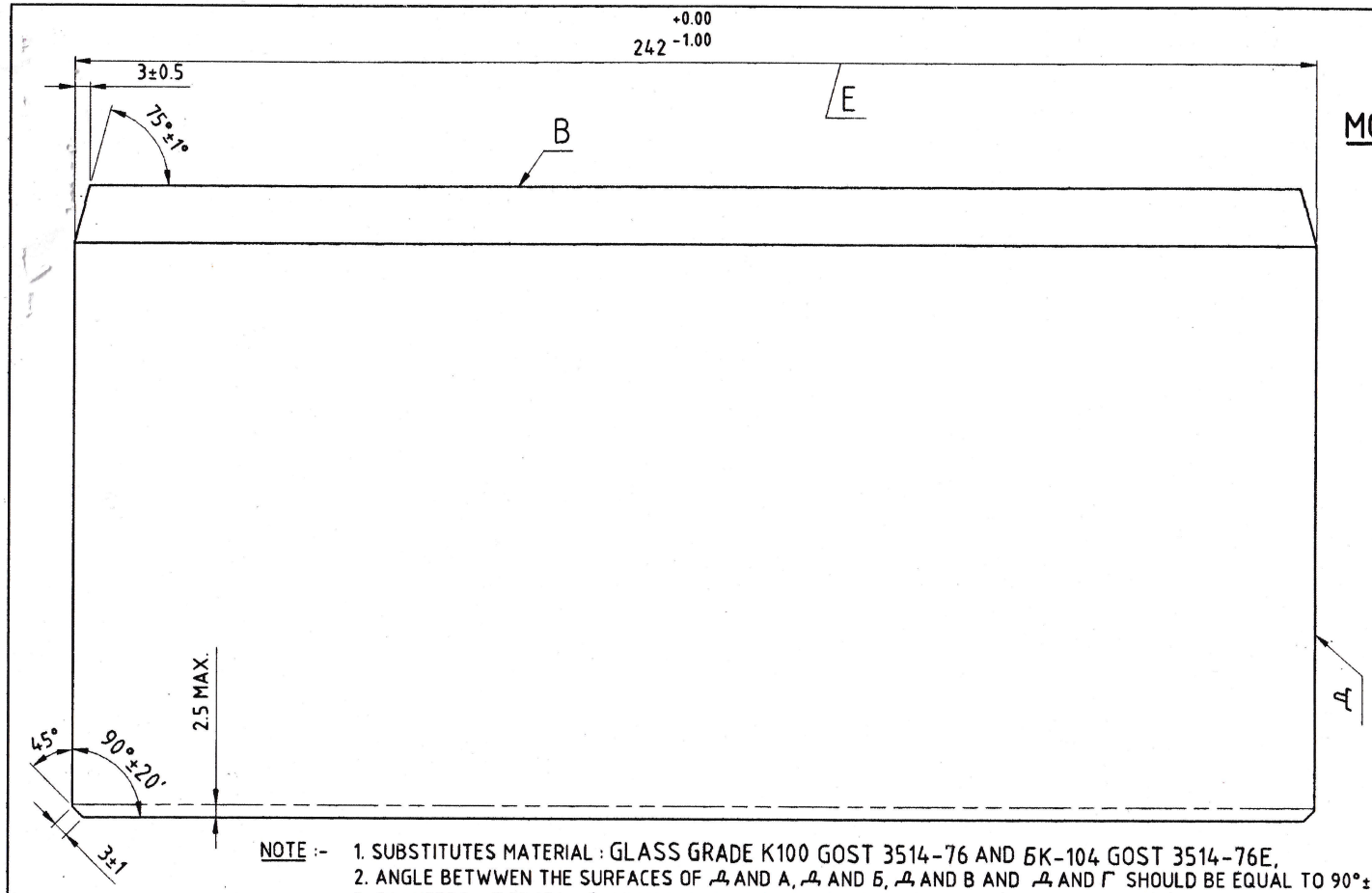

MCT-2551/3

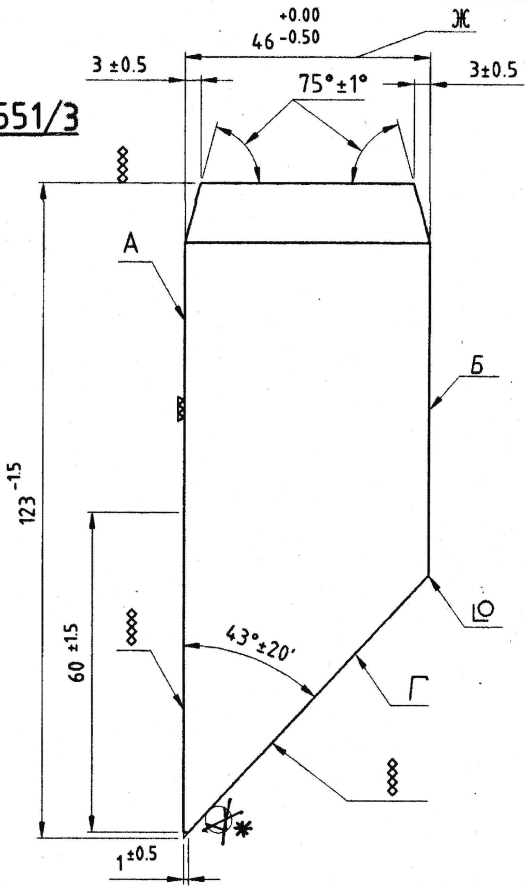

NOTE :-
1. SUBSTITUTES MATERIAL : GLASS GRADE K100 GOST 3514-76 AND БК-104 GOST 3514-76E,
2. ANGLE BETWWEN THE SURFACES OF Д AND A, Д AND Б, Д AND B AND Д AND Г SHOULD BE EQUAL TO 90°±20'.
3. CHAMFERS AT EDGES $1^{+1}\times45°$ EXCEPT AT SPECIFIED PLACE, CHAMFER AT CORNERS $2^{+1}\times45°$.
4. TAPERNESS ON DIMENSIONS E AND Ж SHOULD BE 1/2 OF TOLERANCE GIVEN FOR DIMENSIONS.
5. WORKING ZONE ON SURFACE A,B AND Г IS LIMITED BY CHAMFERS AND GIVEN DIMENSIONS.
* ~~6. Ø 25P 3E.72 IT AS PER OST 3-1901-85.~~ (WITH OUT SILVERING SURFACE)
7. FINE POLISH (20-10).
8. FINE GREY.
9. SURFACE FLATNESS ONE RING OVER 100 mm. DIA.
10. NO CHIPT ALLOWED ON EDGES.
11. Ю SHARP CORNERS.
12. GENERAL :- THE GLASS /GLASS MOULDS USED SHALL CONFORM TO IS:1400:1960 FOR ALL OPTICAL & PHYSICAL CHARACTERISTICS FOR THE SIZES USED.

ALL DIMENSIONS ARE IN mm.

FOR TRADE OFFR
Date of Issue 19/03/21

MATL.- GLASS K-108, GOST 3514-76 E

ALTERNATE EQUIVALENT MATL.-
OPTICAL GLASS, BSC-7 (517642) (RADIATION RESISTANT), GRADE-Aa TO IS: 1400-1960, RE-AFFIRMED 1996, ABSORPTION LESS THAN 1%

ORDNANCE FACTORY DEHRADUN	DR:- R.K.SHARMA	PERISCOPE A.V. T.N.P.O.-168B (T-72) PRISM		DATE-01.09.2007	SCALE- 1:1
	TR.:-		D.A. No.- 31/2016, Dt.- 05/11/2016	MATL. AS ABOVE	TREAT –
	CH.:-		D.A. No.- 10/2012, DT.- 28/08/2012		
	APPROVED. JWM/DO. AWM/PRM Jt.GM/PII.	DRG. No.- AU 7.200.056	D.A. No.- 09/2012, Dt.- 11/06/2012	SHTS.:- 1	SHT. No.:- 1
			AMENDMENTS. OFD/DO/002	DRAWING No.- MCT-2551/3	