Do not scale the drg. if in doubt, Ask	Unless otherwise stated, ① All dim in mm. ② Drg. drawn to first angle projection	Nominal Dim	Tolerance in um
		25E11	+170 +40

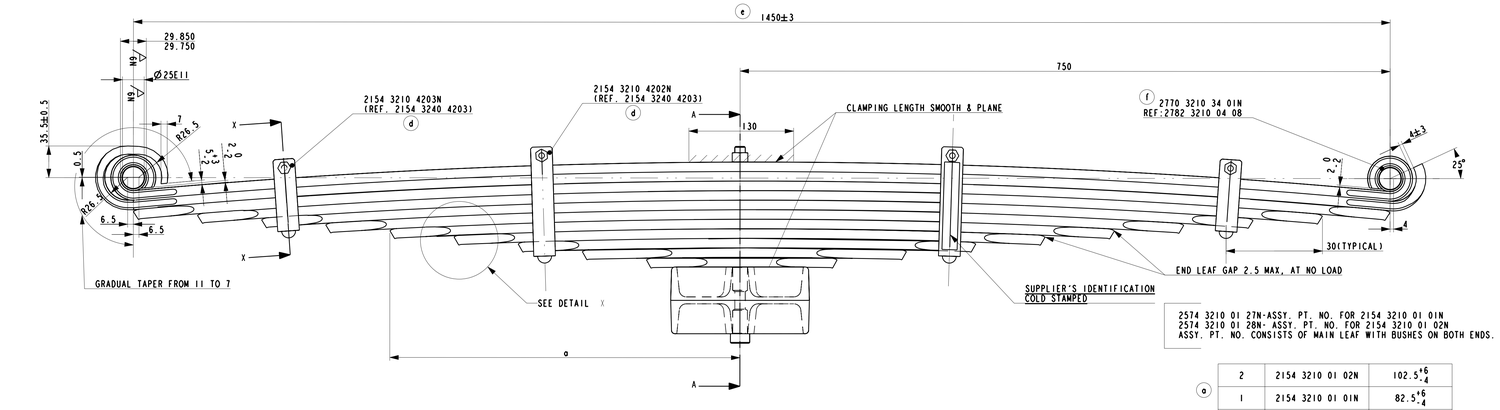

2574 3210 01 27N-ASSY. PT. NO. FOR 2154 3210 01 01N
2574 3210 01 28N- ASSY. PT. NO. FOR 2154 3210 01 02N
ASSY. PT. NO. CONSISTS OF MAIN LEAF WITH BUSHES ON BOTH ENDS.

a	2	2154 3210 01 02N	102.5^{+6}_{-4}
	1	2154 3210 01 01N	82.5^{+6}_{-4}
	SL NO	PART NO	NO LOAD ASSY. CAMBER

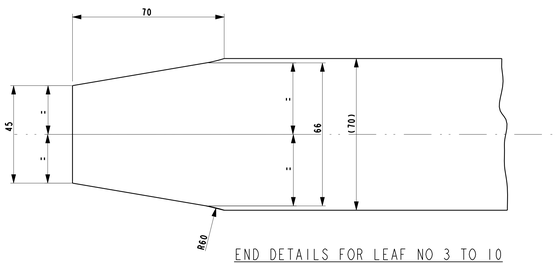

END DETAILS FOR LEAF NO 3 TO 10

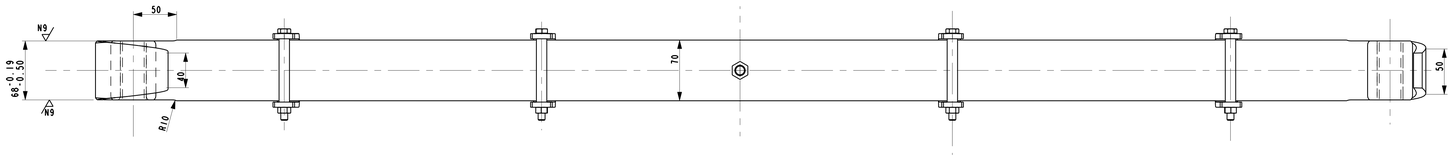

FOR PART NO 2154 3210 01 01N					
LEAF NO.	DEV. LG.	THK	PART NO.	DIMN 'a' IN DEV. LG.	* FREE CAMBER
1	1675	11	2060 3210 71 27N	-	43±4
2	1677.5	11	2060 3210 71 28N	-	83±4
3	1450	11	2574 3210 71 16N	-	84±4
4	1298	11	2060 3210 71 29N	626	54±4
d 5	1144	11	2154 3210 71 03N	552	44±4
6	990	11	2060 3210 71 31N	478	33±4
7	836	11	2060 3210 71 32N	404	25±4
8	682	11	2060 3210 71 33N	330	17±4
d 9	528	11	2154 3210 71 04N	256	10±4
10	374	11	2060 3210 71 35N	182	5.5±2
11	220	11	2060 3210 71 36N	108	

*FREE CAMBER IS DEFINED AS THE ARC HEIGHT WITH ARC LENGTH EQUAL TO LEAF LENGTH. FOR LEAF NOS. 1&2 TAKE THE DATUM LINE ALONG THE CENTRE LINE OF THE EYES.

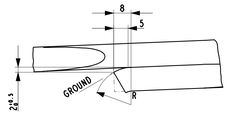

LEAF ENDS EITHER BENT OR GROUND TO SHAPE

DETAIL 'X'
SCALE 1:1

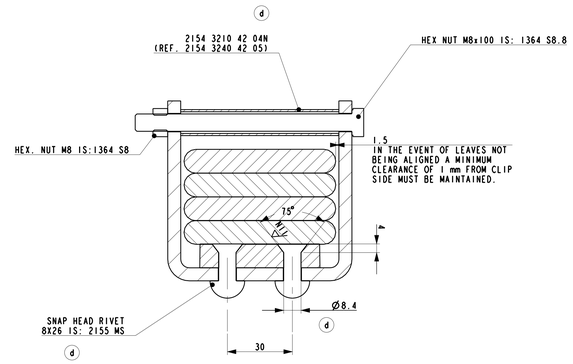

FOR HIGHER CAMBER SPRING P NO. 2154 3210 01 02N					
LEAF NO	DEV LG	THK.	PART NO	DIMN 'a' IN DEV LG	FREE CAMBER
1	1675	11	2060 3210 71 38N	-	63±4
2	1677.5	11	2060 3210 71 39N	-	103±4
3	1450	11	2574 3210 71 18N	-	83±4
4	1298	11	2060 3210 71 40N	626	
d 5	1144	11	2154 3210 71 01N	552	56±4
6	990	11	2060 3210 71 42N	478	43±4
7	836	11	2060 3210 71 43N	404	31±4
8	682	11	2060 3210 71 44N	330	
d 9	528	11	2154 3210 71 02N	256	
10	374	11	2060 3210 71 46N	182	
11	220	11	2060 3210 71 47N	108	

NOTE:-

SPRING DRAWN AT A LOAD OF 1620 Kg
PERMISSIBLE DEVIATION OF PERPENDICULARITY OF EYE FACES TO THE AXIS OF EYE MEASURED ON THE OUTER DIA OF THE EYE IS NOT TO EXCEED 0.2 mm.
ALL OTHER REQUIREMENTS ARE AS PER IS: 75804.
TOLERANCES NOT MENTIONED ARE AS PER IS: 1135.
DEFLECTION DIAGRAM WITH CLAMPING BASE IS TO BE AS SHOWN WITH THE TWO EYES BEING SUPPORTED BY FREE MOVING PINS.
ALL LEAVES TO BE SHOT PEENED ON THE TENSION SIDE ONLY.
THE COMPLETE SPRING ASSY. TO BE SUBJECTED TO 'SCRAG TEST'.

NOTE:-

PT.NO. 2154 3210 01 01N & 2154 3210 01 02N HAVE MAIN PACK OF PT. NO. 2574 3210 01 03 & 2574 3210 01 16N RESPECTIVELY.

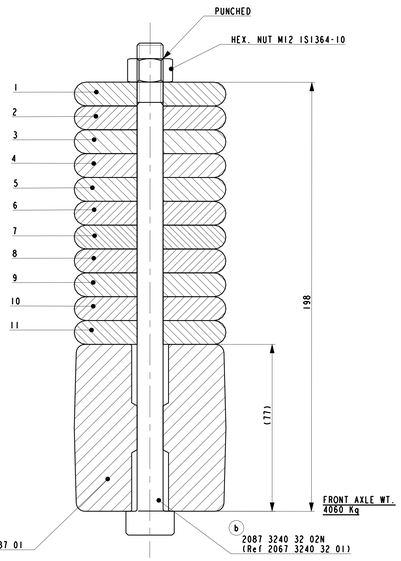

SECTION A-A
SCALE 1:1

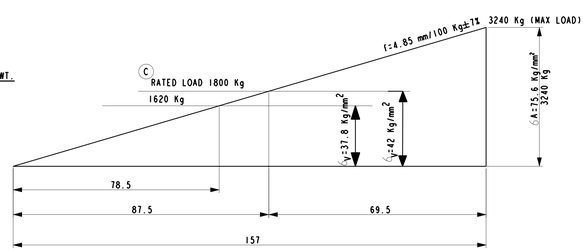

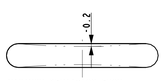

MAXIMUM DEVIATION FROM PARALLELITY OF LEAF SURFACE -0.20

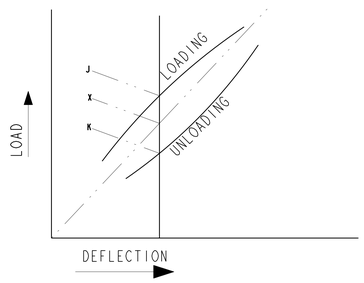

FOR CHECKING DEFLECTION DIAGRAM THE MEAN VALUE BETWEEN THE CURVES LOADING & UNLOADING IS TO BE TAKEN

X=J+K/2

Machining Deviations as per ISO 2768 m																			
Over	-	6	30	120	400	1000	2000	Symbol	N1	N2	N3	N4	N5	N6	N7	N8	N9	N10	N11
Dim Upto (mm)	6	30	120	400	1000	2000	4000	Value	50	25	6.3	1.6	0.8	0.1	0.8		0.8		
Tolerance	±0.1	±0.2	±0.3	±0.5	±0.8	±1.2	±2	FOR OTHER ROUGHNESS SYMBOLS & VALUES, SEE IS 10719											

Machining Deviation as per class in ISO 2768

SURFACE ROUGHNESS SYMBOLS / VALUES IN um Ra

14/03/2008	98JM 212167	f	BB	BIMETALLIC BUSH 2770 3210 34 01N WAS 2060 3202 34 01						ABB	SSH
28/01/13	99JM 204441	e		DIM 1450 ±3 WAS 1450 ±0.3							
29/08/08	99JM 204387	d		PART NO. 2154 3210 4202, 2154 3210 4203; 2154 3210 4204 WAS 2513 3210 4203, 2513 3210 4202, 012 324 0153 2KZDLM Ø8.4, 1.5 WAS Ø10.5,3, RIVET 8X26 QTY-2 WAS 10X26 QTY PART 2154 3710 3101,2154 3210 7102,2154 3210 1103,2154 3210 7104 WAS 2060 3210 17141, 2060 3210 7145, 2060 3210 7130, 2060 3210 7134						Sd/-	Sd/-
11/04/13	99JM 200297	c	-	FULL LOAD CHANGED AS RATED LOAD						Sd/-	Sd/-
13/11/13	99JM 203265	b		PT NO 2087 3240 32 02N WAS CENTRE BOLT M12X210X1.						Sd/-	Sd/-
13/11/13		a		TABLE ADDED WITH NO LOAD ASSY CAMBER						Sd/-	Sd/-
20/09/06	99JM 204063			NEW RELEASE						Sd/-	Sd/-
Date	Mod. No.	Sh.	Zone	Modification						Chkd.	Appd

N12 (N11 N9)

Material Description, Size, Spec, Std No.: 65 Si7 V 125-150 SS 9020 A

Classification of characteristics:
- Critical, A Key Instruction
- Major, (None) Minor
- Applies to upper limit
- Applies to lower limit

This drawing is the sole property of Tata Motors Limited. It should not be copied or communicated to any person without the written approval of Tata Motors Limited.

		DATE
2000	SIGN	
DRW	R.B.S.	13/09
CHKD	Sd/-	13/09
APPD	Sd/-	13/09

Scale: 1:2.5 (1:1)

Product/Group No.

Drg./Part Designation: TABLE ASSY FRONT SPRING

TATA MOTORS LIMITED
ERC - JAMSHEDPUR

Fin. mass in kg: 67.22

Surface protection as per Std.

Tol. as per Std.

Replaces Drg.

Reference Drg. No. 2574 3210 01 03

Opp. Hand Drg./ Pt. No.

Drg./Part No.: 2154 3210 04 01

Sheet No.....1..... of .....1..... Sheets

PCF - 07/1/03 31/2002

6842-4130 7846 PRINTED BY: PRINTED ON: STATUS: