DRAWING NUMBER
306-66-2

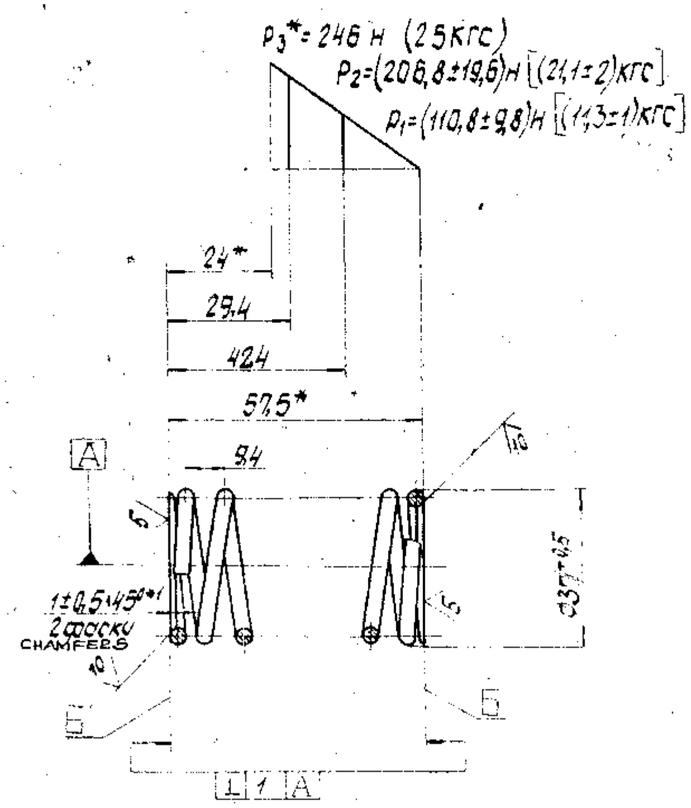

1. INSPECTION GROUP IV-TT-11.
2. HRC3 41-48
3. DIRECTION OF SPRING COILING-L.H
4. LENGTH OF THE DEVELOPED SPRING-770mm
5. NUMBER OF WORKING COILS-5.25
6. TOTAL NUMBER OF COILS-7.25+0.5
7. INTERNAL DIAMETER OF THE SPRING SHOULD BE CHECKED WITH A CHECKING BAR (Ø29.8 -0.03)mm. THE SPRING SHOULD GO DOWN THE VERTICAL CHECKING BAR BY GRAVITY
8. CHECKING UNDER LOADS P1 AND P2 IS COMPULSORY FOR EVERY SPRING.
9. THICKNESS OF THE RESTING COIL END SHOULD NOT BE LESS THAN 0.8mm
10. GAP BETWEEN THE RESTING COIL END AND ADJACENT COIL SHOULD NOT EXCEED 0.2mm
11. RESTING SURFACE Б SHOULD HAVE AT LEAST 5/8 OF THE LENGTH OF THE COIL CIRCUMFERENCE.
12. THE GAP BETWEEN SURFACE Б AND THE SURFACE PLATE SHOULD NOT EXCEED 0.2mm
13. INCREASE OF THE EXTERNAL DIAMETER OF THE RESTING COIL UP TO 37.75mm MAXIMUM IS PERMISSIBLE.
14. VARIATION IN THE PITCH OF THE NON LOADED SPRING SHOULD NOT EXCEED 0.5mm
15. AFTER COIL TO COIL COMPRESSION OF THE SPRING THE PERMANENT DEFORMATION IS NOT PERMISSIBLE.
16. COATING: LACQUER ГФ 95 IN ACCORDANCE WITH ИТ 09-73 CONTACT PLACES OF THE RESTING COILS MAY NOT HAVE COATING.
17. THE SPRING SHOULD BE HARDENED BY SHOTS IN ACCORDANCE WITH UM-159.75
18. RESTING SURFACES Б MAY BE GROUND AFTER HARDENING THE SPRING BY SHOTS.
19. THE COMPONENT SHOULD BE CHECKED FOR DEFECT BY MAGNETIC FIELD FLAW DETECTOR THE TECHNICAL REQUIREMENTS AND ACCEPTANCE RULES ARE IN ACCORDANCE WITH TECHNICAL REQUIREMENTS UB-17
20. * DIMENSIONS AND PARAMETERS ARE FOR REFERENCE.
21. * DIMENSION AFTER HARDENING OF SPRING BY SHOTS.

EXPLANATORY NOTE:

22. REFERENCE MATERIAL QUOTED.

ALLOY STEEL SPRING WIRE GRADE 51X Ф A, WITH SPECIAL SURFACE FINISH POLISHED GROUP "A" OF HIGHER ACCURACY "П" FOR COLD SPRING COILING "XH" WITH DIAMETER OF 3.5 $\left(^{+0.03}_{-0.02}\right)$ mm TO GOST 14963-78 AND MANUFACTURED IN ACCORDANCE WITH ALLOY STEEL GRADE 51X Ф A TO GOST 14969-79

a) CHEMICAL COMPOSITION AS PER GOST 14969-79

GRADE OF STEEL	CONTENTS OF ELEMENTS %					MAXIMUM	
	C	Si	Mn	Cr	V	P	S
51X ФA	0.47 0.55	0.15 0.30	0.30 0.60	0.75 1.10	0.15 0.25	0.025	0.025

b) MECHANICAL PROPERTIES AS PER GOST 14963-78.

ULTIMATE TENSILE STRENGTH Kgf/ mm² Min- - - 105

REDUCTION IN AREA % Min- - - - - - - - - - - 40

(A) CQA(HV)5.06.606E
CQA(HV)5.06.610E
* CБ-20-06-13-6
CБ-20-06-12-6

PILOT SAMPLE SHOULD BE APPROVED BY A H S P BEFORE BULK PRODUCTION.

EST. WT	TO BE STAMPED OR MARKED WHERE INDICATED THUS # (LETTERS)
0.057Kg	

ALL SHARP EDGES AND CORNERS TO BE REMOVED UNLESS OTHERWISE STATED MACHINED CORNERS TO HAVE R OUTSIDE R INSIDE EQUIVALENT CHAMFERS ARE PERMISSIBLE

ISSUE	DATE	NATURE OF AMENDMENTS
A	15.7.15	Pt. 11, 7th Alt. Comm. Meeting Dt. 11.4.12.

DRN
CHD
TCD
APPD
DATE 05.5.2C
SCALE 1 : 1
DIMENSIONS IN mm
TOLERANCE ON DIMNS UNLESS OTHERWISE STATED TO
ALL THREADS TO CONFORM TO

MATERIAL - WIRE 51X Ф A-A
П-XH-3.5 GOST 14963-78

USED ON CБ 406-13-32
* CБ 406-12-21
CБ 413-117-2

CONTROLLERATE OF INSPECTION (HEAVY VEHICLES) AVADI

TITLE VALVE SPRING SMALLER

D S CAT NUMBER

DRAWING NUMBER 306-66-2

A 5
SIZE A2