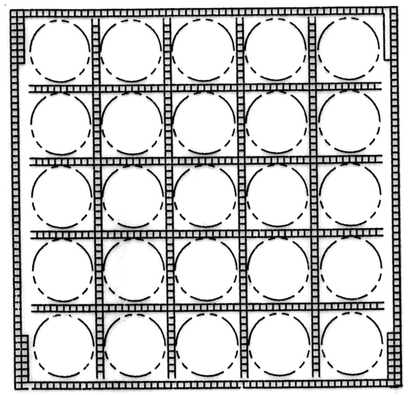

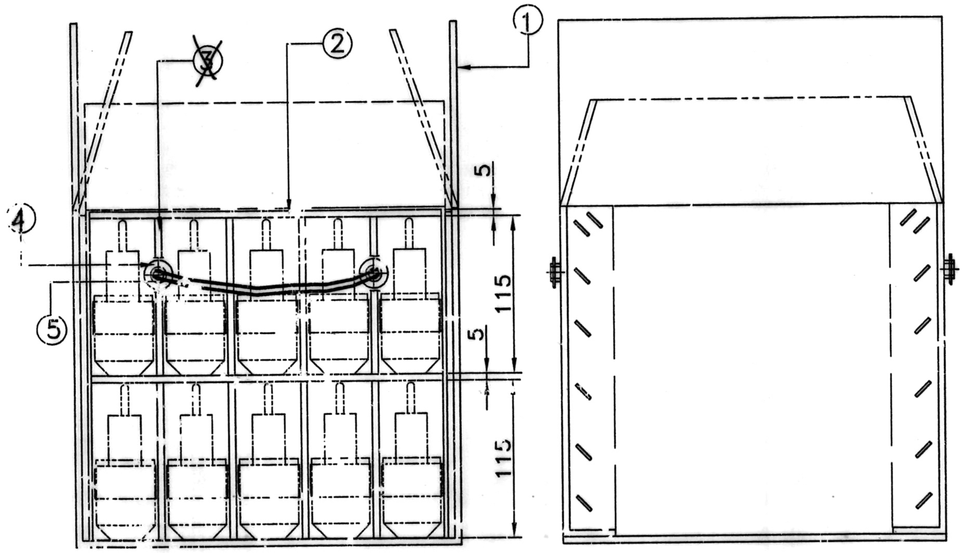

GENERAL ARRANGEMENT

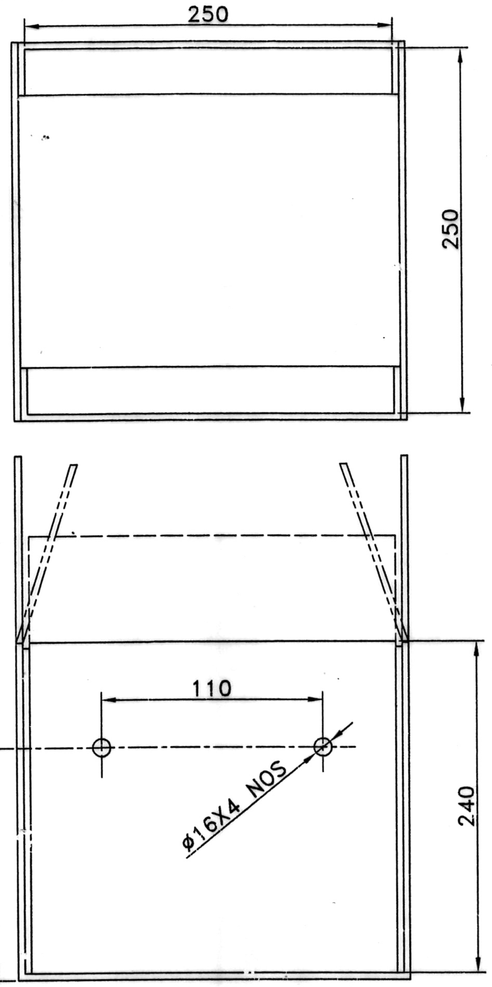

① BOX

MATERIAL–
HIGH IMPACT CO–POLYMER
OF POLYPROPYLENE CORRUGATED
SHEET OF 5 mm THICK.&
DENSITY OF 900–1100GSM
IN BLUE COLOUR.
NO.OFF– 1

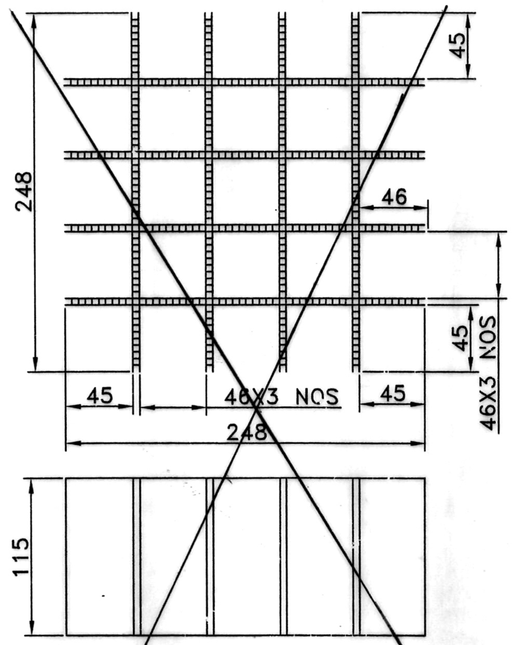

③ SEPERATOR

MATERIAL–
HIGH IMPACT CO- POLYMER
OF POLYPROPYLENE CORRUGATED
SHEET OF 5 mm THICK.&
DENSITY OF 900–1100GSM
IN BLUE COLOUR.
NO.OFF– 2

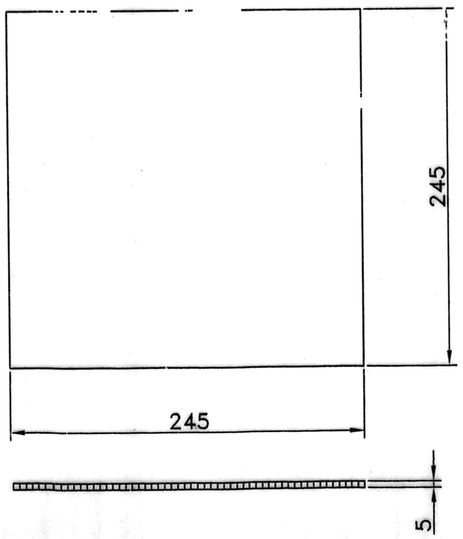

② SEPERATOR COVER

MATERIAL–
HIGH IMPACT CO–POLYMER
OF POLYPROPYLENE CORRUGATED
SHEET OF 5 mm THICK.&
DENSITY OF 900–1100GSM
IN BLUE COLOUR.
NO.OFF– 2

ITEM NO.	NO. OFF	MATERIAL	DESCRIPTION
5	2	NYLON	NYLON ROPE ø8X250 L
4	4	PBC	EYE LATCH
~~3~~	~~2~~	~~AS STATED~~	~~SEPERATOR~~
2	2	AS STATED	SEPERATOR COVER
1	1	AS STATED	BOX

LIST OF PARTS

DT.&SG.	DESCRIPTION
16/12/17 34117 D.A.NO	*ITEM NO.3 DELETED & DRG NO. ADVANCE TO 'A'
AMENDMENTS	

SCHEDULE NO :–
SCALE:–NTS
PROJECTION THIRD ANGLE
DRAWN BY : 07/07/08
TRACED BY :
CHECKED BY : 07/07/08
APPROVED BY : 08/07/08
CONCURRED BY: AWM/F
SIGN. DATE : 08/9/08

COMPT.:–B–15 (DD)
STORE DRG NO.

PACKING BOX FOR B–15 (DD)

DRG.NO– CO–484A

M / C :
NO. OF SHTS.:–1
G. & S. FY. COSSIPORE.
SHT. NO. :– 1