IMPD-0985

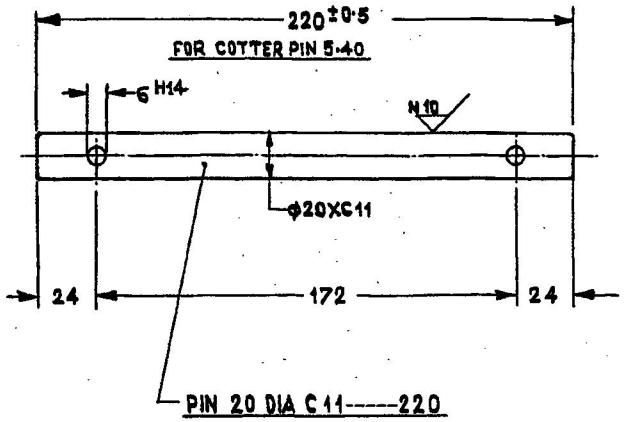

MATL:- IS:1570-C-40 HARDENED & TEMPERED

PIN φ20 c11 CAT No. 1153

(PIN φ20 X 220 mm LENGTH)

NOTE :-
1) REMOVE BURRS FROM BORES
CURVE ALL SHARP EDGES
2) GALVANIZED AND CHROMOTIZED
TO 20-30 μm

COPY ISSUED BY CDD/OFAJ
यह प्रति सी डी डी/ओ.एफ.ए.जे. द्वारा दी गई है।
दिनांक : Date 07.07.14
अनुभाग प्रमुख HOS/CDD

DRG BASED ON CAT No. 1153 D S-No. 14/5315-000606

DC (1)	DATE	ZONE	BRIEF RECORD	SIG

DRN		DRG NOT TO BE SCALED
TCD		ALL SHARP EDGES & CORNERS TO BE ROUNDED OFF
CHD	SL C'D/MAN	ALL DIMNSIONS IN mm, UNLESS OTHERWISE SPECIFIED
PSD	ACIE (DRG)	NOMENCLATURE
APPD		AS STATED
DATE	23/11/07	
TOLERANCE UNLESS OTHERWISE SPECIFIED GEN DEC ANG		SCALE:- 1:2
MEDIUM IS: 2102		CONTROLLERATE OF INSPECTION ENGINEERING EQPT

PERTAINS TO:-
IMSA-0167&0168

IMPD-0985