D:\MVK\640\AMBV-0800- BRACKET, CRANK ARM)

AMBV/00800
BRACKET, CRANK ARM
QTY/VEH: 1 No.

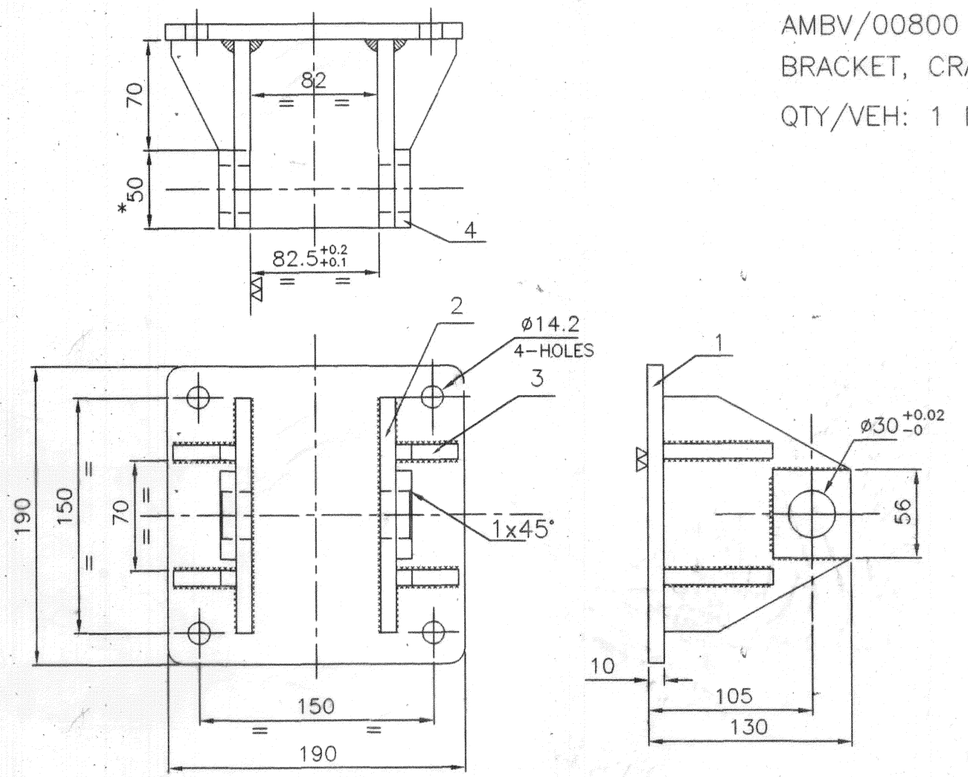


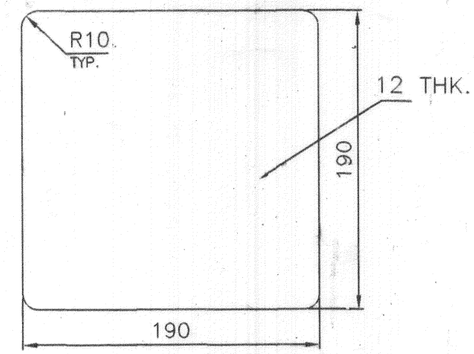


AMBV/00801
BASE PLATE
QTY/ASSY: 1 No.

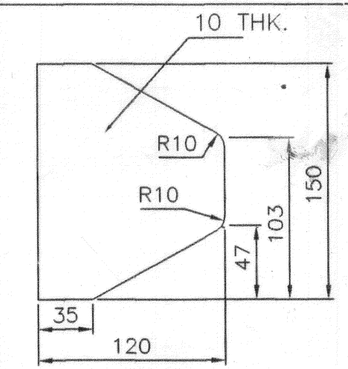


AMBV/00802
VERTICAL PLATE
QTY/ASSY: 2 Nos.

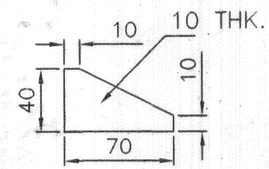


AMBV/00803
RIB
QTY/ASSY: 4 Nos.

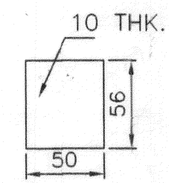


AMBV/00804
SUPPORT PLATE
QTY/ASSY: 2 Nos.

1. ALL DIMENSIONS ARE IN mm .
2. UNSPECIFIED LIMIT DEVIATIONS ARE ±0.1mm
3. ALL MACHIMING WORK IS TO BE DONE AFTER FULL WELDING OF THE BRACKET.
4. DIMENSION $82.5^{+0.2}_{+0.1}$ IS TO BE MAINTAINED OVER LENGTH OF 50mm AS SHOWN IN THE DRAWING WITH '*' MARK.
5. COATING: RED-OXIDE.

| | | | | |
|---|---|---|---|---|
| 04 | AMBV/00804 | SUPPORT PLATE | 2 | |
| 03 | AMBV/00803 | RIB | 4 | |
| 02 | AMBV/00802 | VERTICAL PLATE | 2 | |
| 01 | AMBV/00801 | BASE PLATE | 1 | |
| Sl. No. | DRAWING NUMBER | NOMENCLATURE | QTY./ ASSY. | REMARKS |

| ISSUE | APPRD. | |
|---|---|---|
| Ⓐ | 20/12/04 | MACHINING FOR DIM 82.5 IS NEWLY ADDED. |

20/04

| USED ON | QTY./VEH. |
|---|---|
| M.P.V. | 1 |

ORDNANCE FACTORY, MEDAK
Yeddumailaram-502 205 (AP)
Research & Development Section
Issue of Drawings

Control No:..... Date:.....

Issued To: .....

Copy No.: ..... HOS/R&D

| | NAME | SIGN | DATE |
|---|---|---|---|
| AUTHD | | | |
| APRD. | M.S.P | | |
| CHKD. | M.K. | | |
| DRWN | M.V.K. | | 20/12/04 |

ORDNANCE FACTORY MEDAK

DRG. NO: AMBV/00800-A

BRACKET CRANK ARM

MATERIAL: 10/12mm THICK C-25 TO IS: 2073-70 (OR) St-42 - IS: 1079

| SHEET NO | SCALE | WEIGHT |
|---|---|---|
| | | |

THIRD ANGLE PROJECTION

Sheet No: 18 of 18