IMPD-0997

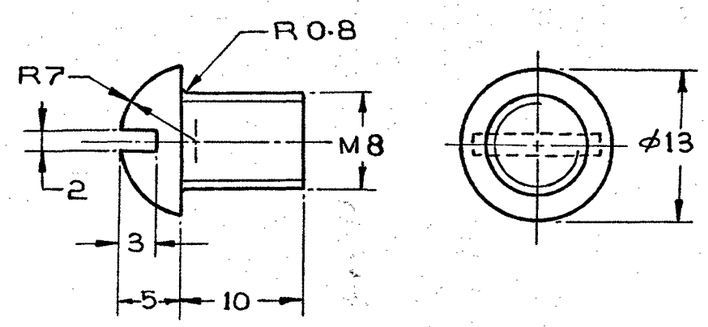

BUTTON HEAD SCREW M8×10

[SCREW, SET M8×10mm LONG] [14/5305-003868]

MATL:- GERMAN MATL:-4S OR 5S DIN-267.
ALTERNATIVE MATL:-BS-970, EN-8 NGC-1 NORMALISED.

NOTE

GALVANISED AND CHROMATIZED TO 12-20 μm.

DRG BASED ON ISK-0326

DS No. 14/5305-003868

DC(I)	DATE	ZONE	BRIEF RECORD	SIG

DRN		
TCD	S M BAKSHI	
CHD	SL	D/M
PSD		ACLE (DRG)
APPD		
DATE		

TOLERANCE UNLESS OTHERWISE SPECIFIED

GEN	DEC	ANG
–	–	–

DRG NOT TO BE SCALED.

ALL SHARP EDGES & CORNERS TO BE ROUNDED OFF.

ALL DIMENSIONS ARE IN mm UNLESS OTHERWISE SPECIFIED.

NOMENCLATURE

AS STATED

SCALE:- 2:1

PERTAINS TO:-

IMSA-0167&0168

IMPD-0997

CONTROLLERATE OF INSPECTION ENGINEERING EQPT