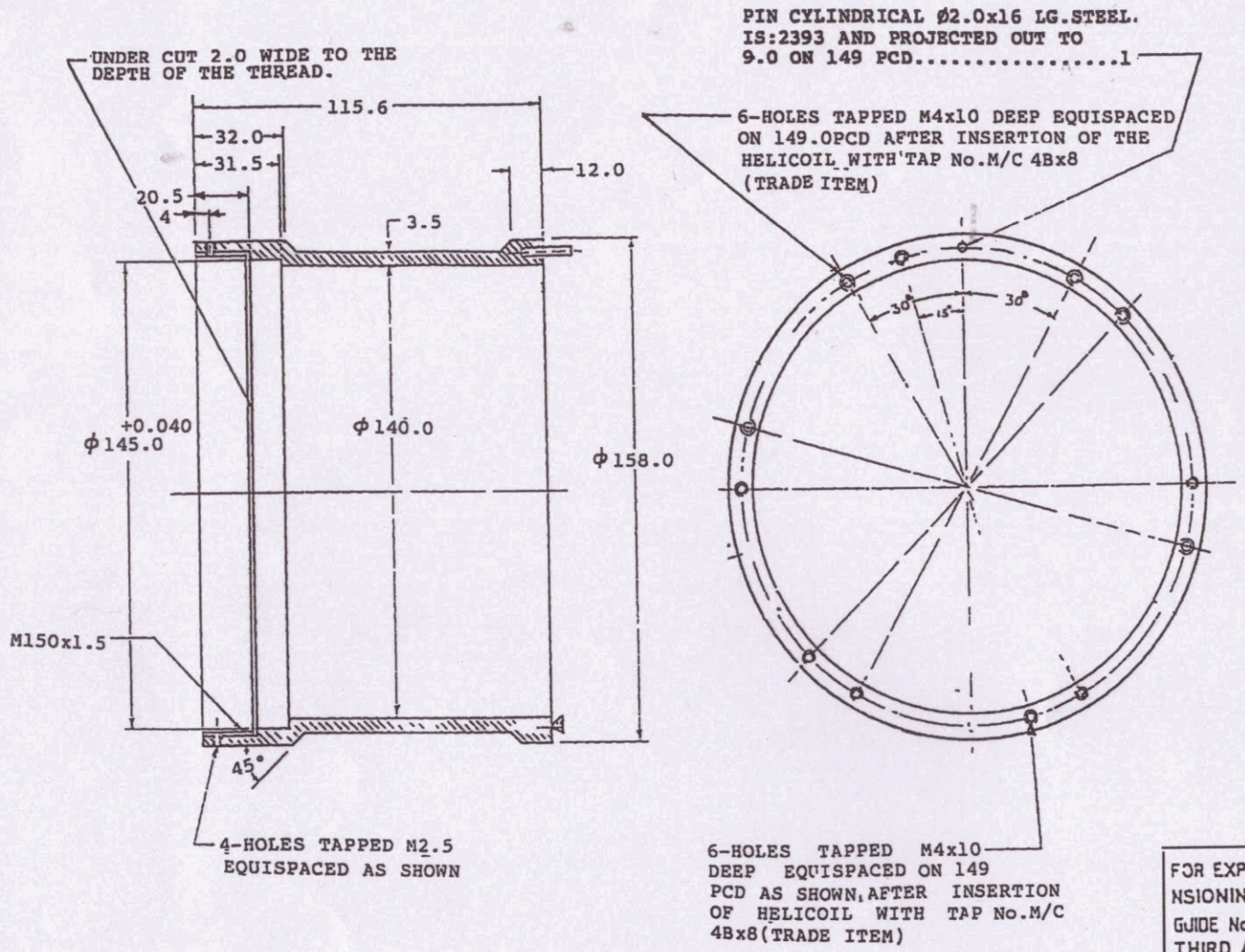

AMENDMENTS	CHD	SIG	DATE
D.C.-5838-I DRG REDUCED & NEW COPY SEALED IN SUPERSESSION OF EXISTING ONE			6 4 94
(a) D.C 5844-I. FINISH AMENDED.			6 5 94

FOR TRADE ONLY
Date of Issue 11/02/2021

FOR EXPLANATION OF DIMENSIONING ETC., SEE CQA(I) GUIDE No 001-1992 THIRD ANGLE PROJECTION DIMENSIONS ARE IN mm	DRN	Sd/-	APPROVED Sd/- FOR DIRECTOR IPDE DEHRADUN
	TCD	Sd/-	
	CHD	Sd/-	
	CHD	Sd/-	DATE 24.2.86.
MATL & SPEC:- AL.ALLOY, 2280(A-11)WP, TO IS:617-1975	USED ON		
	BASED ON		
	CAT/PT No.	3130-000359	
FINISH & SPEC - (a) ANODISED BLACK DULL ~~TO IS:1858~~ AC 15 TO IS 1868-1982.	DRG No	IRDE-1625/1	
	SCALE	: 1	SH OF

HOUSING O.G.

D.C.(I):-1288-1(P),5371-I,5651-I,5838-I. CHECKED
5844-I.
FOR QM

REDUCED DRG. PREPARED AT CQA(T) DEHRA DUN
PREPARED BY : [signature]
CHECKED BY : [signature]
DATE 30.3.94