IFC 002

20-27

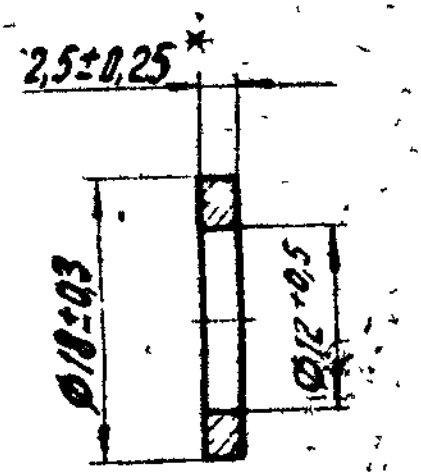

1. DIMENSIONS ARE PROVIDED WITH TOOLS

2 * DIMENSION IS GIVEN FFOR REFERENCE.

* CБ 327-00-45

PILOT SAMPLE SHOULD BE APPROVED BY A H S P BEFORE BULK PRO[illegible]

ISSUE	DATE	NATURE OF AMENDMENTS	
DRN		SCALE - 2 : 1	
CHD		DIMENSIONS IN [illegible]	
TCD		TOLERANCE ON DIMNS UNLESS OTHERWISE STATED	
APPD			
DATE 24-04-87		ALL THREADS CONFORM TO	

EST MASS 0 0004 Kg

TO BE STAMPED OR MARKED WHERE INDICATED THUS # (LETTERS)

ALL SHARP EDGES AND CORNERS TO BE REMOVED UNLESS OTHERWISE STATED MACHINED CORNERS TO HAVE R OUTSIDE R INSIDE EQUIVALENT CHAMFERS ARE PERMISSIBLE

MATERIAL - FIBRE ФТ 2 5 GOST 14613-69

USED ON - CБ 3327-[illegible] T-2 * CБ 327-07-1

CONTROLLERATE OF INSPECTION (HEAVY VEHICLES) AVADI

TITLE - GASKET 2.5 mm or 1.5mm

D S CAT NUMBER

DRAWING NUMBER 329-31A

DRAWING NUMBER
340-183

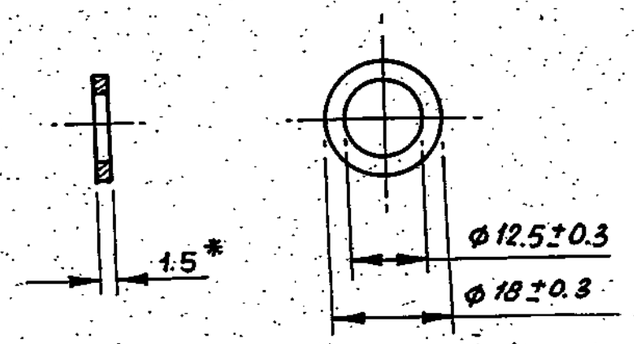

1. ALTERNATE MATERIAL IS BINDERS BOARD 1.5 TO 3mm THICK, GOST 7950-77, CALIBRATED BOARD 1.5 TO 3mm THICK, GOST 1933-73 OR GASKET BOARD A 1.5 GOST 9347-74
2. * DIMENSIONS ARE GIVEN FOR REFERENCE.

EXPLANATORY NOTE:

MATERIAL QUOTED : Б 1.5 GOST 9347-74
Б = GRADE OF CARD BOARD MATERIAL (UNIMPREGNATED)
1.5 = THICKNESS OF CARD BOARD

TECHNICAL PARAMETER :

1. ABSORPTIVITY, AFTER 6 HOURS OF COMPLETE IMMERSION IN WATER % = 60 (MAX)
2. ULTIMATE TENSILE STRENGTH IN TRANSVERSE DIRECTION kgf/mm^2 = 1.4 (MIN)
3. LINEAR DEFORMATION IN TRANSVERSE DIRECTION AFTER HOLDING THE SAMPLE IN HYDROSTAT FOR 24 HOURS % = 0.8 (MAX)
4. MOISTURE CONTENT % = 12 ± 2
5. COMPRESSIBILITY UNDER A LOAD OF 70 kgf/cm^2 % = 12-25
6. ELASTIC DEFORMATION AFTER REMOVING THE LOAD % = 45 (MIN)

EXPLANATORY NOTE ADDED ON 18-6-92

PILOT SAMPLE SHOULD BE APPROVED BY A H S P BEFORE BULK PRODUCTION

EST. WT. 0.003 Kg.

TO BE STAMPED OR MARKED WHERE INDICATED THUS # (LETTERS)

ALL SHARP EDGES AND CORNERS TO BE REMOVED UNLESS OTHERWISE STATED MACHINED CORNERS TO HAVE R OUT SIDE R INSIDE EQUIVALENT CHAMFERS ARE PERMISSIBLE.

ISSUE	DATE	NATURE OF AMENDMENTS

DRN
CHD
TCD
APPD
DATE 24-4-87
SCALE:- 1:1
DIMENSIONS IN mm
TOLERANCE ON DIMNS UNLESS OTHERWISE STATED IS : 2102-69.
ALL THREADS TO CONFORM TO

MATERIAL:- Б 1.5 GOST 9347-74

USED ON C6327-07-2

CONTROLLERATE OF QUALITY ASSURANCE (HEAVY VEHICLES) AVADI.

TITLE GASKET

D. S CAT NUMBER

DRAWING NUMBER 340-183

SIZE A3

				QTY	REMARKS
		CB 327-07-1	PUMP ELEMENT ASSY		
			PARTS		
	1	327 - 57 - 1	PLUNGER	1	
	2	327 - 58 - 1	PLUNGER BARREL	1	
	3	340 - 183 OR 329 - 31A	GASKET	1	

ISSUE	DATE	NATURE OF AMENDMENTS	ISSUE	DATE	NATURE OF AMENDMENTS
DRN		USED ON	CB 20-27-00-4		
CHD		CONTROLLER RATE OF INSPECTION HEAVY			CS AVADI
TCD		TITLE	PUMP ELEMENT ASSY		
APPD		DIST LIST NUMBER	ITEM LIST NO CB 327-07-1		
DATE 7-05-87	SHT No 2 OF 2				

CБ327-07-1

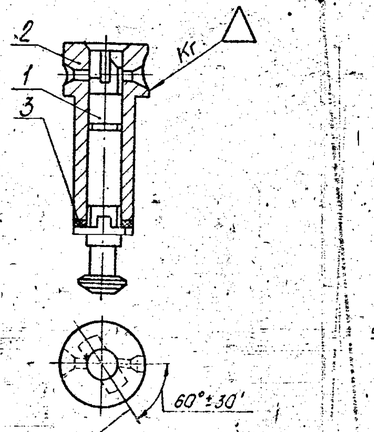

∠ PLUNGER DOG AXIS WHEN PERFORMING CHECK AS PER ITEM 5

1. COMPOUND-LAPPED PARTS, i.e., PLUNGER AND PLUNGER BARREL COMPRISE A PRECISION PAIR, IN WHICH REPLACEMENT OF ONE PART WITH A SIMILAR PART FROM SOME OTHER PRECISION PAIR IS NOT PERMITTED.

2. DIAMETER OF THE HOLE OF THE COMPOUND-LAPPED PLUNGER BARREL SHOULD BE $10^{+0.1}$ mm.

3. THERE SHOULD NOT BE NICKS AND CRACKS ON THE EDGES AND CHIPPED EDGES ON THE COMPOUND-LAPPED SURFACES, OF THE PARTS OF THE PRECISION PAIR ARE NOT ALLOWED. COMPOUND-LAPPED SURFACES SHOULD HAVE UNIFORM LUSTER. OVER THE ENTIRE SURFACE TRACES OF GRINDING ARE NOT ALLOWED. MINUTE SCRATCHES, HARDLY, VISIBLE TO THE NACKED EYE ARE PERMITTED. FINISH OF THE COMPOUND-LAPPED SURFACES SHOULD NOT BE WORSE THAN STANDARD. THE SURFACE MAY HAVE NON-UNIFORM LUSTER. IN THE LOWER PART OF THE PLUNGER (NOT ABOVE OIL GROOVE).

4. THE PLUNGER PRELIMINARILY WASHED TOGETHER WITH THE PLUNGER BARREL IN DIESEL FUEL, SHOULD SMOOTHLY DESCEND DOWN TO THE STOP BY GRAVITY WHEN IT MOVES OUT OF THE BARREL IN THE VERTICAL POSITION BY 40 TO 50 mm. CHECK IN DIFFERENT POSITIONS AGAINST THE ANGLE OF TURN OF THE PLUNGER IN THE BARREL

WHEN THE PLUNGER MOVES IN THE BARREL, NO LOCAL RESISTANCES STOPAGES AND BUILDING IN ANY POSITION OVER THE ENTIRE LENGTH AND ANGLE OF TURN ARE NOT PEMITTED.

5. USE THE TEST SET, MADE IN COMPLIANCE WITH DRAWING БС 507И TO PEFORM CLOSE FIT CHECK AGAINST STANDARD PRECISION PAIRS AS SPECIFIED IN INSTRUCTIONS UB 46-1 BY USING MIXTURE OF OIL AND DIESEL FUEL, HAVING ENGLER VISCOSITY OF $1.9^{\pm 0.1}$ AT TEMPERATURE OF 50° C, MIX THE MIXTURE PROPERLY BEFORE FILLING THE TANK. SURFACES OF PLUNGER AND BARREL SHOULD BE KEPT FREE FROM PETROLEUM AND GREASE OF OTHER GRADES.

THE WEIGHT OF THE TEST SETSHOULD CREATEA PRESSURE OF 29.5^{+5} MPA (300^{+5} Kg/cm^2) IN THE PLUNGER BARREL, WASH THE PRECISION PAIR THROUGHLY IN FILTERED DIESEL FUEL BEFORE THE TEST.

THE PRECISION PAIR IS CONSIDERED TO BE FIT FOR SERVICE AS PER CLOSE FIT IN THAT CASE WHEN THE WEIGHT DROPS FOR THE TIME BEING WITH THE STANDARD READING LIMITS.

NOTE: BEFORE TAKING THE FIRST MEASUREMENTS, IT IS NECESSARY TO SLIGHTLY PRESS THE END CAP OF THE PLUNGER BARREL AND FORCE FUEL OUT OF THE BARREL BY LOWERING THE WEIGHT BY HAND, THIS DONE, RELEASE THE PLUNGER BARREL, BRING UP THE WEIGHT, SINK THE PLUNGEAND TAKE THE FIRST MEASUREMENT.

6. INSTALL PART 340-183 OR 329-31A (REF. NO. 3) TO PREVENT THE UPPER EDGE OF THE PLUNGER FROM CRUSHING IN STORAGE, TRANSPORTATION AND WHEN DELIVERED AS SPARE-PARTS.

REMOVE GASKETS BEFORE INSTALLING THE PRECISION PAIR ON TO THE PUMP.

7. PRESERVATION AND STORAGE OF PRECISION PAIR SHOULD BE AS PER MANUFACTURER'S INSTRUCTIONS DEPENDING UPON THE STORAGE LIFE.

PILOT SAMPLE SHOULD BE APPROVED BY A H S P BEFORE BULK PRODUCTION

			EST. MASS 0,140 Kg	TO BE STAMPED OR MARKED WHERE INDICATED THUS # (LETTERS)
			ALL SHARP EDGES AND CORNERS TO BE REMOVED UNLESS OTHERWISE STATED MACHINED CORNERS TO HAVE R OUTSIDE & INSIDE EQUIVALENT CHAMFERS ARE PERMISSIBLE	
ISSUE	DATE	NATURE OF AMENDMENTS		
DRN		SCALE :- 1 : 1	MATERIAL :- —	USED ON :- CБ 20-27-00-4
CHD		DIMENSIONS IN mm	CONTROLLERATE OF INSPECTION (HEAVY VEHICLES) AVADI	
TCD		TOLERANCE ON DIMNS UNLESS OTHERWISE STATED	TITLE :- PUMP ELEMENT	
APPD			D S CAT NUMBER	DRAWING NUMBER CБ 327-07-1
DATE	6/3/67	ALL THREADS CONFORM TO		

DRAWING NUMBER
20-27-63-1

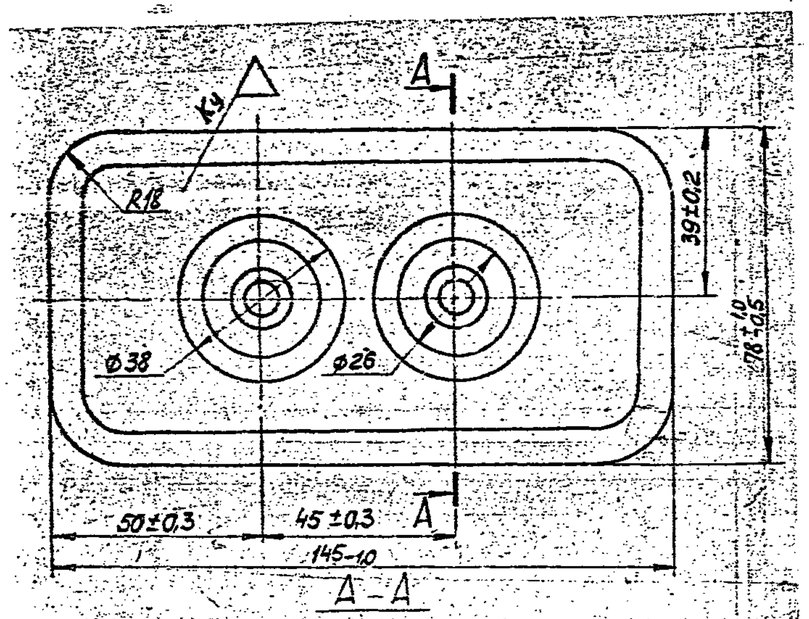

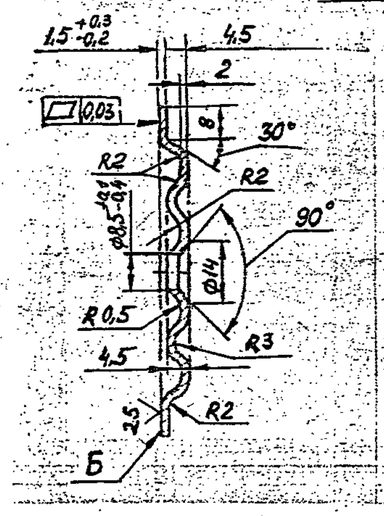

1. REQUIREMENTS PLACED UPON STAMPING ARE AS PER STANDARD 82050-16.
2. UNSPECIFIED LIMIT DEVIATIONS OF DIMENSIONS ARE AS FOLLOWS :-
   FOR HOLES - AS PER A7,
   SHAFTS - AS PER B7,
   OTHERS - AS PER CM7.
3. NON-FLATNESS OF SURACE Б SHOULD BE CHECKED BY PRESSING THE COVER TO THE PLATE WITH TWO SCREWS.
4. THE VARIATION IN WALL THICKNESS OF FLANGE SHOULD NOT EXCEED 0.5 mm.
5. COATING : ZINC-PLATED, 15 MICRONS THICK, OILED.
6. ALTERNATE MATERIAL IS STEEL 08, 08nc, 10kn, 10nc, 15kn, GOST 1050-74.

EXPLANATORY NOTE:-

MATERIAL QUOTED : COLLED ROLLED SHEET STEEL 2 B GOST 19904-74
08 KП GOST 1050-74.

ALTERNATE MATERIAL QUOTED : COLLED ROLLED SHEET STEEL GRADES 08, 08ПС, 10 KП, 10ПС, 15 KП GOST 1050-74.

2 = THICKNESS OF SHEET STEEL

B = STANDARD ACCURACY

CHEMICAL COMPOSITION AS PER GOST 1050-74

GRADE OF STEEL	CONTENT OF ELEMENTS %							
	C	Si	Mn	Cr	S	P	Ni	Cu
				MAXIMUM				
08	0.05-0.12	0.17-0.37	0.35-0.65	0.10	0.040	0.035	0.25	0.25
08KП	0.05-0.11	0.037 (Max)	0.25-0.50	0.10	0.040	0.035	0.25	0.25
08ПC	0.05-0.11	0.05-0.17	0.35-0.65	0.10	0.040	0.035	0.25	0.25
10KП	0.07-0.14	0.07 (Max)	0.25-0.50	0.15	0.040	0.035	0.25	0.25
10ПC	0.07-0.14	0.05-0.17	0.035-0.065	0.15	0.040	0.035	0.25	0.25
15KП	0.12-0.19	0.07 (Max)	0.25-0.50	0.25	0.040	0.035	0.25	0.25

MECHANICAL PROPERTIES AS PER GOST 1050-74.

GRADE OF STEEL	YIELD POINT Kgf/mm² (MIN)	ULTIMATE TENSILE STRENGTH Kgf/mm² (MIN)	ELONGATION % (MIN)	REDUCTION OF AREA (MIN)
08	20	33	33	60
10	21	34	31	55
15	23	38	27	55

Ⓐ EQUIVALENT MATERIAL
Gr.DD IS:513-1994

PILOT SAMPLE SHOULD BE APPROVED BY A H S P BEFORE BULK PRODUCTION.

EST. WT. 0.164 kg.

TO BE STAMPED OR MARKED WHERE INDICATED THUS # (LETTERS)

ALL SHARP EDGES AND CORNERS TO BE REMOVED UNLESS OTHERWISE STATED MACHINED CORNERS TO HAVE R OUTSIDE R INSIDE EQUIVALENT CHAMFERS ARE PERMISSIBLE.

ISSUE	DATE	NATURE OF AMENDMENTS
A	10.03.10	4th Alt.Comm.Mt.Minutes Pt.No.1 Dt.26.10.09

DRN
CHD
TCD
APPD
DATE 25-4-87
SCALE :- 1:1
DIMENSIONS IN mm.
TOLERANCE ON DIMNS UNLESS OTHERWISE STATED IS 2102-69
ALL THREADS TO CONFORM TO

MATERIAL :-
2 B GOST 19904-74
08 KП GOST 1050-74

USED ON :-
CS 20-27-10-1

CONTROLLERATE OF QUALITY ASSURANCE (HEAVY VEHICLES)
AVADI

TITLE
HOUSING COVER

D S CAT NUMBER

DRAWING NUMBER
20-27-63-1

K.V.D. No.-66742

SIZE A2

DRAWING NUMBER
20-27-64

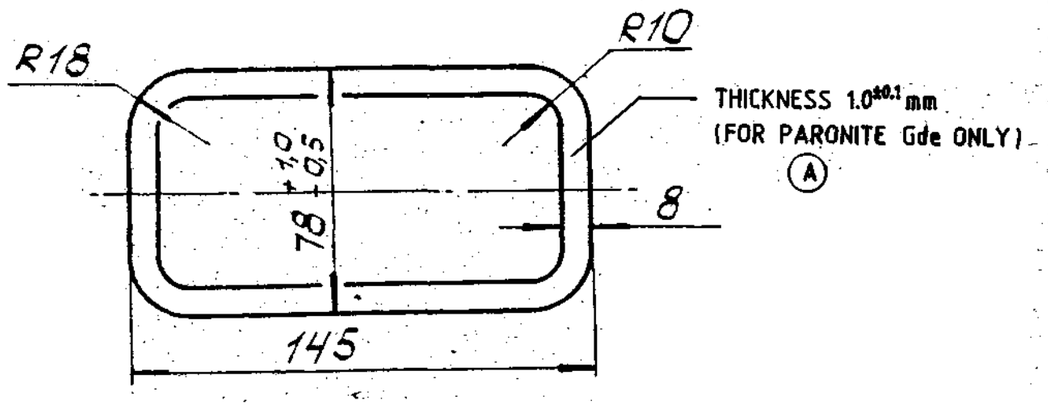

1. REQUIREMENTS PLACED UPON STAMPING ARE AS PER STANDARD 82050-16.

EXPLANATORY NOTE :-

MATERIAL QUOTED : PARONITE ПОН1 GOST 481-80

ПОН1 = GRADE OF MATERIAL

TECHNICAL REQUIREMENTS :

1. WORKING MEDIUM = OIL DIESEL FUEL
2. LIMITING TEMP. °C (MIN) = 120
3. PRESSURE kgf/cm^2 = 23 (MIN)
4. DENSITY g/cm^3 = 1.6 TO 2.0
5. CONVENTIONAL BREAKING POINT IN TRANSVERSE DIRECTION kgf/cm^2 = 50 (MIN)
6. INCREASE IN WEIGHT
   (a) IN WATER AT 100°C FOR 12 HOURS % = 10
   (b) IN KEROSENE AT 23°C FOR 12 HOURS % = 50
7. COMPRESSIBILITY AT 350 kgf/cm^2 = 8 TO 20
8. RECOVERY AFTER REMOVAL OF PRESSURE = 30 (MIN)

PILOT SAMPLE SHOULD BE APPROVED BY A H S P BEFORE BULK PRODUCTION

EST. WT. 0.006 kg.

TO BE STAMPED OR MARKED WHERE INDICATED THUS # (LETTERS)

ALL SHARP EDGES AND CORNERS TO BE REMOVED UNLESS OTHERWISE STATED MACHINED CORNERS TO HAVE R OUT SIDE R INSIDE EQUIVALENT CHAMFERS ARE PERMISSIBLE.

ISSUE	DATE	NATURE OF AMENDMENTS
A	11.4.14	8th ALT. COMM. Mtg MIN POINT No. 12 Dt. 20.2.14

DRN	—
CHD	
TCD	
APPD	
DATE	24-4-87
SCALE:-	1:2
DIMENSIONS IN mm	
TOLERANCE ON DIMNS UNLESS OTHERWISE STATED IS : 2102-69.	
ALL THREADS TO CONFORM TO	

MATERIAL:- PARONITE ПОН1 GOST 481-80

USED ON СБ 20-27-10-1

CONTROLLERATE OF QUALITY ASSURANCE (HEAVY VEHICLES) AVADI.

TITLE GASKET

D S CAT NUMBER

DRAWING NUMBER 20-27-64

SIZE A3

DRAWING NUMBER
СБ 20-27-10-1

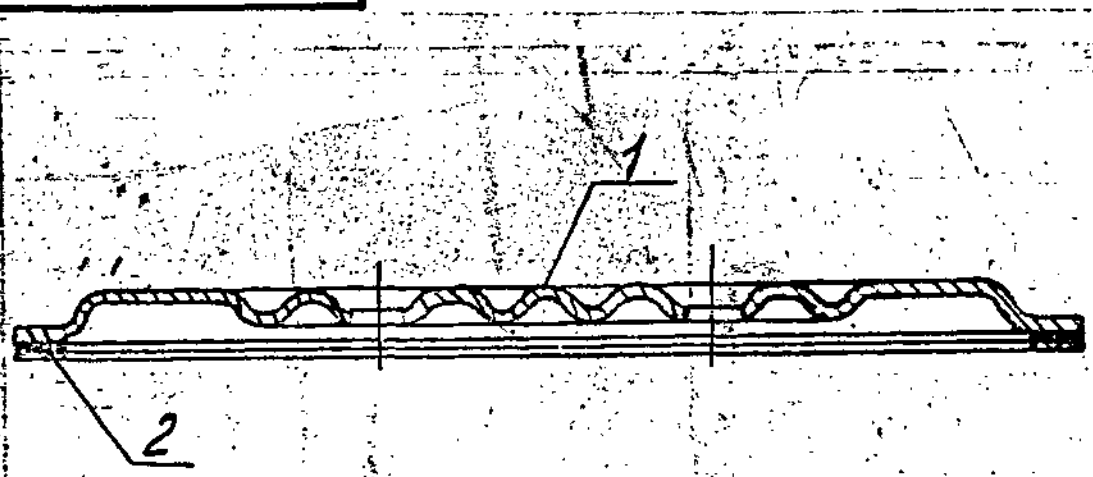

1. SECURE GASKET REF. NO. 2 WITH VARNISH SEALANT GOST 13489-79 OR TY 6-10-1010-70.

PILOT SAMPLE SHOULD BE APPROVED BY A H S P BEFORE BULK PRODUCTION.

		EST. WT. 0.231 kg.	TO BE STAMPED OR MARKED WHERE INDICATED THUS # (LETTERS)
		ALL SHARP EDGES AND CORNERS TO BE REMOVED UNLESS OTHERWISE STATED MACHINED CORNERS TO HAVE R OUTSIDE R INSIDE EQUIVALENT CHAMFERS ARE PERMISSIBLE.	
		MATERIAL:-	USED ON СБ 20-27-00-4
ISSUE	DATE	NATURE OF AMENDMENTS	
DRN		SCALE:- 1:1 DIMENSIONS IN mm	CONTROLLERATE OF QUALITY ASSURANCE (HEAVY VEHICLES) AVADI.
CHD			
TCD		TOLERANCE ON DIMENSIONS UNLESS OTHERWISE STATED IS 2102 -69	TITLE PUMP HOUSING COVER ASSY.
APPD		ALL THREADS CONFORM TO	D S CAT NUMBER
DATE 4-5-87			DRAWING NUMBER СБ 20-27-10-1

SIZE A4

USED ON

CB 20-27-00-4

ITEM	DRAWING NUMBER	D S CAT NUMBER	DESCRIPTION	No. OFF	REMARKS
	CB20-27-10-1		PUMP HOUSING		
	& ITEM LIST		COVER ASSY.		
			COMPONENTS		
1	20-27-63-1		HOUSING COVER	1	
2	20-27-64		GASKET	1	

ISSUE	DATE	NATURE OF AMENDMENTS	ISSUE	DATE	NATURE OF AMENDMENTS

DRN		CONTROLLERATE OF QUALITY ASSURANCE (HEAVY VEHICLES) AVADI		
CHD		TITLE: PUMP HOUSING COVER ASSY.		
TCD.				
APPD		SHT. No. 1 OF 1	D S CAT NUMBER	ITEM LIST FOR CB 20-27-10-1
DATE	14-5-91			

[redacted]

DRAWING NUMBER
20-27-322-4

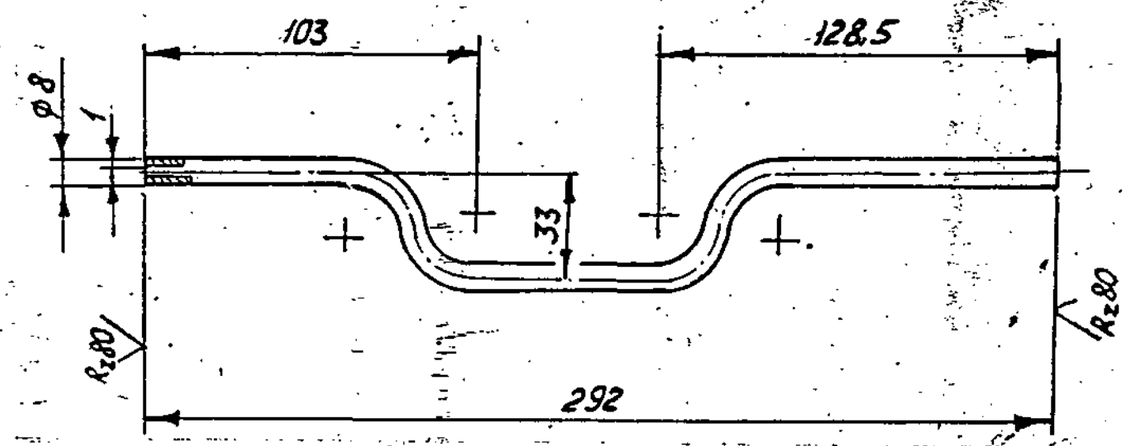

NOTES:-

1. DIMENSIONS WITHOUT TOLERANCES SHOULD BE PROVIDED WITH ACCURACY OF ± 1mm.
2. BENDING RADII ARE 20±3 mm.
3. THE TOTAL LENGTH AT THE UNBENT PIPE IS APPROXIMATELY 330 mm.
4. QUALITY OF THE PIPE AT POINTS OF BENDING SHOULD NOT EXCEED 0.8 mm.
5. WRINKLES MAY BE FORMED ON THE INTERNAL PORTION OF THE BENDING, BUT THEIR HEIGHT SHOULD NOT EXCEED 0.5mm.

EXPLANATORY NOTE:-

MATERIAL QUOTED: 8×1 - 20 A TY 14-3-480-76.

HIGH PRESSURE SEAMLESS STEEL

20 A : GRADE OF PIPE.

8 : OUTER DIAMETER.

1 : WALL THICKNESS

CHEMICAL COMPOSITION %

CARBON = 0.15-0.25 ; SILICON = 0.17-0.37;
MANGANESE = 0.35-0.65.

CHROMIUM = 0.30 ; NICKEL = 0.30 ; } MAX
PHOSPHORUS = 0.035 ; SULPHER = 0.035

MECHANICAL PROPERTIES.

ULTIMATE RUPTURE STRENGTH Kgf/mm² (MIN) = 40

RELATIVE ELONGATION % (MIN) = 21.

PILOT SAMPLE SHOULD BE APPROVED BY A H S P BEFORE BULK PRODUCTION

EST. WT. 0.031 kg.

TO BE STAMPED OR MARKED WHERE INDICATED THUS # (LETTERS)

ALL SHARP EDGES AND CORNERS TO BE REMOVED UNLESS OTHERWISE STATED MACHINED CORNERS TO HAVE R OUT SIDE R INSIDE EQUIVALENT CHAMFERS ARE PERMISSIBLE.

ISSUE	DATE	NATURE OF AMENDMENTS

DRN
CHD
TCD
APPD
DATE 4-5-87
SCALE:- 1:2
DIMENSIONS IN mm
TOLERANCE ON DIMNS UNLESS OTHERWISE STATED IS:2102-69
ALL THREADS TO CONFORM TO

MATERIAL:- PIPE 8x1-20A TY 14-3-480-76

USED ON CB 20-27-17-5

CONTROLLERATE OF QUALITY ASSURANCE (HEAVY VEHICLES) AVADI

TITLE
AIR BLEEDING PIPE

D S CAT NUMBER

DRAWING NUMBER
20-27-322-4

SIZE A3

DRAWING NUMBER
20-29-18

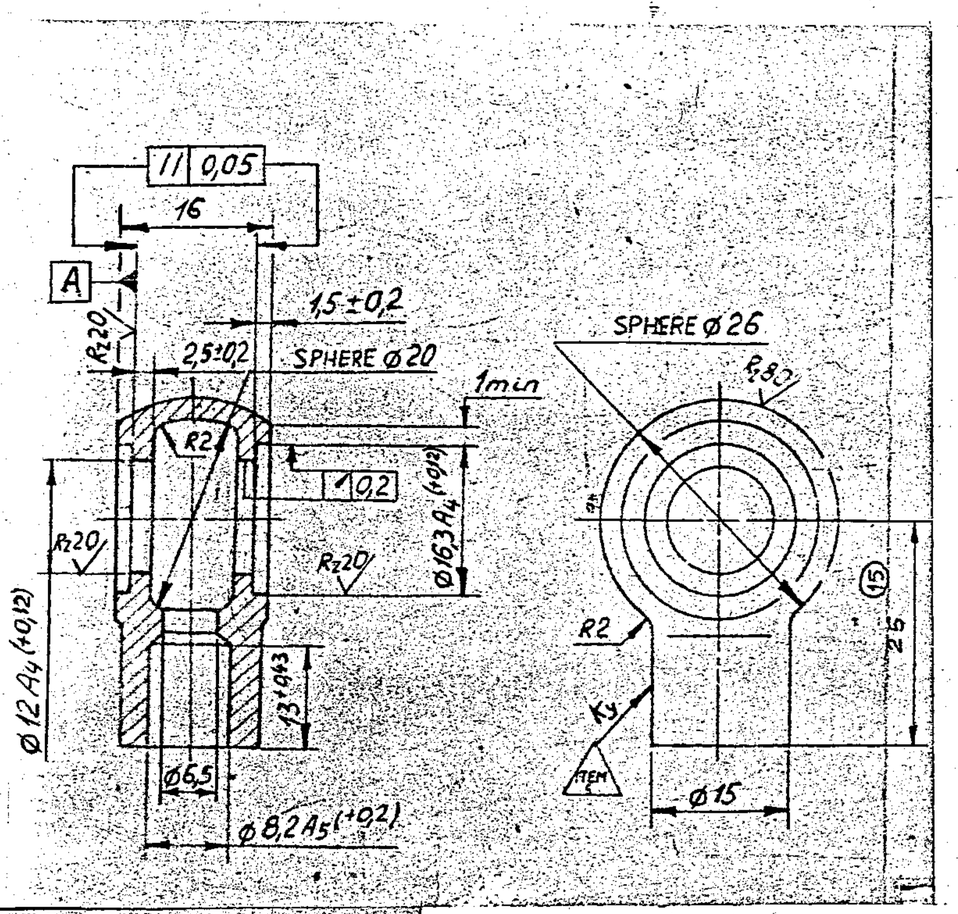

1, ALTERNATE MATERIAL IS STEEL 30, 40 AS PER GOST 1050-74.

2, UNSPECIFIED LIMIT DEVIATIONS OF DIMENSIONS ARE AS FOLLOWS :-
FOR HOLES - AS PER A7,
SHAFTS - AS PER B7,
OTHERS - AS PER CM7.

3, TOTAL TOLERANCE FOR ALIGNMENT AND INTERSECTION OF THE AXIS OF CYLINDRICAL SHANK WITH RESPECT TO THE AXIS OF PLANES A IS R0.3mm ALONG THE LENGTH OF THE CYLINDRICAL PORTION.

4, THE PARTS WHICH ARE MEANT FOR SPARE PARTS ARE CADMIUM-PLATED, 9 MICRONS, OILED.
ABSENCE OF COATING ON THE INTERNAL SURFACES IS PERMITTED.

5, STAMPING ON THE TAG (PART 540-551) FOR BATCH OF PARTS AND SEALING ARE ALLOWED.

EXPLANATORY NOTE:

6, MATERIAL QUOTED: 35 GOST 1050-74.
ALTERNATE MATERIAL QUOTED:- 30 AND 40 GOST 1050-74.
30, 35 & 40 = GRADES OF STEEL.

CHEMICAL COMPOSITION:-

GRADE OF STEEL	CONTENT OF ELEMENTS %							
	C	Si	Mn	Cr	P	S	Cu	Ni
				MAXIMUM.				
30	0·27-0·35	0·17-0·37	0·50-0·80	0·25	0·035	0·040	0·25	0·25
35	0·32-0·40	0·17-0·37	0·50-0·80	0·25	0·035	0·040	0·25	0·25
40	0·37-0·45	0·17-0·37	0·50-0·80	0·25	0·035	0·040	0·25	0·25

MECHANICAL PROPERTIES:-

GRADE OF STEEL	TENSILE STRENGTH kgf/mm²	YIELD POINT kgf/mm²	ELONGATION %	REDUCTION IN AREA %	IMPACT STRENGTH kgf·m/cm²
	MINIMUM				
30	50	30	21	50	8
35	54	32	20	45	7
40	58	34	19	45	6

(15A) ALTERNATE MATERIAL: STEEL 080M40 (EN 8)
TO BS: 970-Pt-I-1983 OR 35C4 TO IS 1570

S6 20-29-00-8
** S6 20-20-00-10
S6 20-20-03-7
S6 20-27-17-5
S6 20-22-03-7
S6 20-35-10-~~11~~ 12

PILOT SAMPLE SHOULD BE APPROVED BY A H S P BEFORE BULK PRODUCTION.

EST. WT. 0·040 kg

TO BE STAMPED OR MARKED WHERE INDICATED THUS # (LETTERS)

ALL SHARP EDGES AND CORNERS TO BE REMOVED UNLESS OTHERWISE STATED MACHINED CORNERS TO HAVE R OUTSIDE R INSIDE EQUIVALENT CHAMFERS ARE PERMISSIBLE.

ISSUE	DATE	NATURE OF AMENDMENTS
15A	9-6-09	3rd ALTN. COMM. MINUTES POINT 6. DATE 27-2-09
15	25-7-69	NOTO NO. 1357-83

DRN
CHD
TCD
APPD
DATE 6-3-87
SCALE :- 2:1
DIMENSIONS IN mm.
TOLERANCE ON DIMNS UNLESS OTHERWISE STATED IS 2102-69
ALL THREADS TO CONFORM TO

MATERIAL :- 35 GOST 1050-74

USED ON :- * *

CONTROLLERATE OF QUALITY ASSURANCE (HEAVY VEHICLES)
AVADI

TITLE
SWIVEL ELBOW

D S CAT NUMBER

DRAWING NUMBER
20-29-18

SIZE A2

СБ20-27-17-5

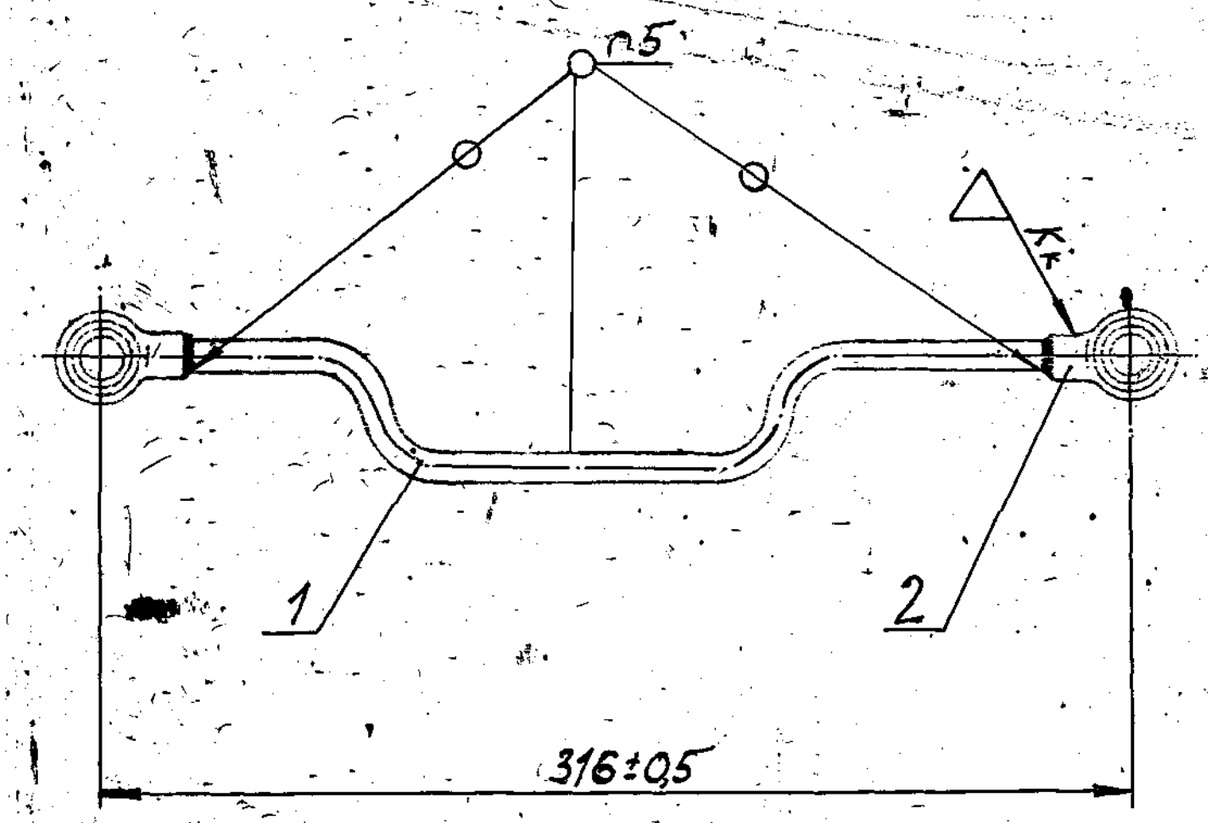

1 INTERNAL DIAMETER OF THE PIPE AND BRAZED POINTS OF SWIVEL ELBOWS SHOULD BE CLEANED FROM SCALE AND RUST.

2 AFTER FINAL MATCHING AS PER MOCK-UP, PIPE SHOULD BE WASHED WITH FILTERED DIESEL FUEL AT AN INLET PRESSURE OF 0,1 MPa (1 kgf/cm^2) FOR TWO MINUTES. WHEN THE PIPE IS WASHED, KNOCK THE PIPE TO REMOVE REMAINING SCALE.

3 CHECK THE PIPE FOR CLEANLINESS BY USING BENZINE (BY RINSING PIPE) AND THEN PASS BENZINE THROUGH FILTER PAPER.
FILTER PAPER SHOULD BE FREE OF DEPOSIT VISIBLE TO THE NAKED EYE. CHECK 10 % OF ASSEMBLIES.

4 CHECK THE PIPE FOR LEAKAGE BY SUPPLYING DIESEL FUEL AT A PRESSURE OF 0,5 MPa (5 kgf/cm^2) FOR 2 MINUTES. FUEL LEAKAGE IS NOT PERMITTED.

5 BRAZE USING BRAZING SOLDER Л 63, GOST 15527-70. BRAZED POINTS MAY HAVE SINGLE BLUNT PORES DETECTED AFTER APPLYING ZINC PLATING IF LEAK-PROOFNESS IS PROVIDED.

6 BEARING SURFACES OF SWIVEL ELBOWS SHOULD BE IN ONE END THE SAME PLANE.

7 COATING :- ZINC-PLATED, 15 MICRONS THICK, OILED. NO COATING ON INTERNAL SURFACES IS PERMITTED.

PILOT SAMPLE SHOULD BE APPROVED BY A H S P BEFORE BULK PRODUCTION

			EST. MASS 0,111 Kg	TO BE STAMPED OR MARKED WHERE INDICATED THUS # (LETTERS)
			ALL SHARP EDGES AND CORNERS TO BE REMOVED UNLESS OTHERWISE STATED MACHINED CORNERS TO HAVE R OUTSIDE R INSIDE EQUIVALENT CHAMFERS ARE PERMISSIBLE	
ISSUE	DATE	NATURE OF AMENDMENTS		
DRN		SCALE :- 1:2	MATERIAL :- —	USED ON :- СБ 20-27-00-4
CHD		DIMENSIONS IN mm	CONTROLLERATE OF INSPECTION (HEAVY VEHICLES) AVADI	
TCD		TOLERANCE ON DIMNS UNLESS OTHERWISE STATED	TITLE :- AIR BLEEDING PIPE ASSY	
APPD				
DATE 25-04-87		ALL THREADS CONFORM TO	D S CAT NUMBER	DRAWING NUMBER СБ 20-27-17-5

			TECHNICAL PAPERS	
		Cb. 20-27-17-5	AIR BLEEDING PIPE ASSY	
			PARTS	
	1	20-27-322-4	AIR BLEEDING PIPE	1
	2	20-29-18	SWIVEL ELBOW	2

ISSUE	DATE	NATURE OF AMENDMENTS	ISSUE	DATE	NATURE OF AMENDMENTS

DRN		USED ON	CB 20-27-00-4
CHD		CONTROLLERATE OF INSPECTION (HEAVY VEHICLES) AVADI	
TCD		TITLE	AIR BLEEDING PIPE ASSY
APPD		D S CAT NUMBER	ITEM LIST FOR CB20-27-17-5
DATE 7-05-87	SHT No 1 OF 1		

DRAWING NUMBER
20-27-332-2

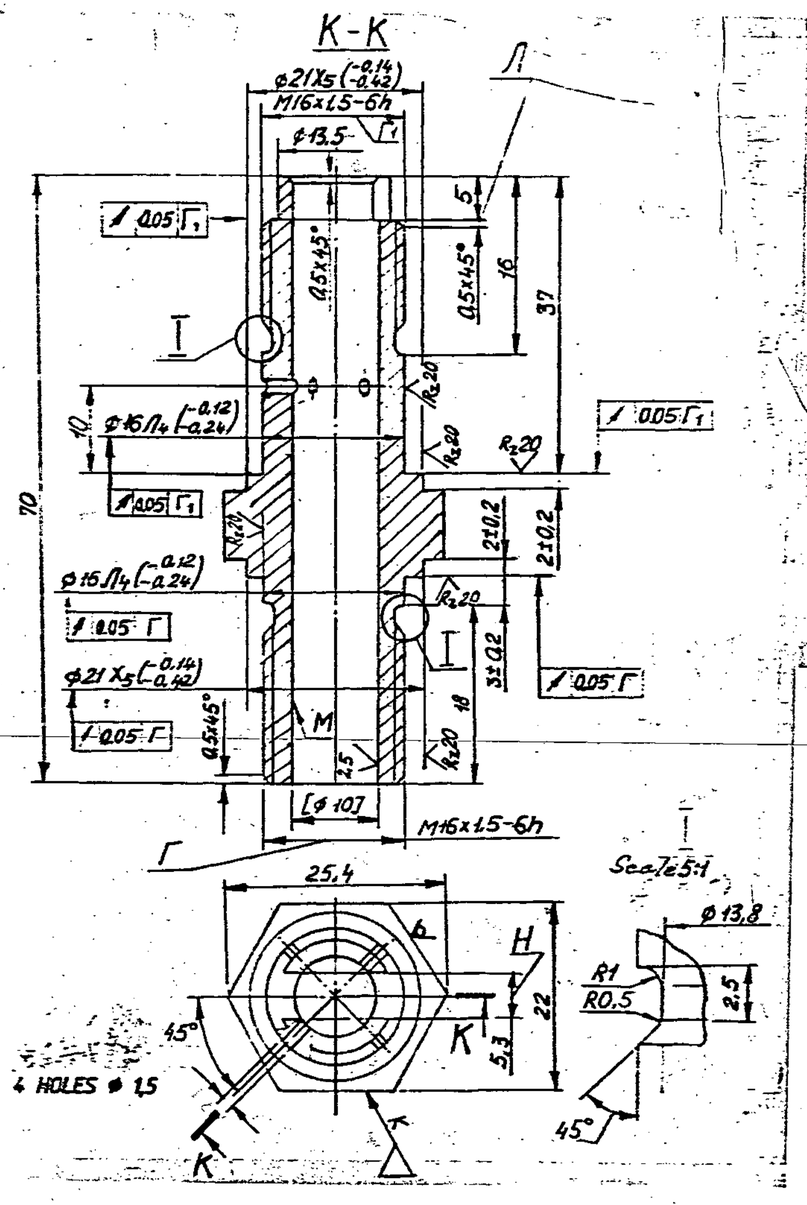

1 INSPECTION GROUP IV AS PER TECHNICAL REQUIREMENTS TT-11.

2 H R C 33 TO 37.

3 UNSPECIFIED LIMIT DEVIATIONS OF DIMENSIONS ARE AS FOLLOWS :-
FOR HOLES - AS PER A7,
SHAFTS - AS PER B7,
OTHERS AS PER CM7.

4 BOW, BARREL, TAPER AND OVALITY OF SURFACE M SHOULD BE 0,15 mm, max.

5 MISALIGNMENT OF SLOT H WITH RESPECT TO THE AXIS OF SURFACE M SHOULD NOT EXCEED 0,15 mm.

6 CRACKS, BURRS, NOTCHES, DENTS AND OTHER MECHANICAL DAMAGE ARE NOT ALLOWED.

7 THREAD SHOULD BE CLEAN AND FREE FROM BURRS, STRIPPING AND DENTS.

8 COATING : CADMIUM-PLATED, 9 MICRONS THICK, OILED. INTERNAL SURFACES MAY HAVE NO COATING.

9 CHAMFER Л MAY HAVE DIMENSIONS AS 1x30°.

10 DIMENSIONS GIVEN IN SQUARE BRACKETS SHOULD BE PROVIDED IN ASSY. 20-27-28-1.

11. EXPLANATORY NOTE :-

MATERIAL QUOTED :-
18X2H4MA (18X2H4BA) TO GOST 4543-71

CHROMIUM , NICKEL , MOLYBDENUM STEEL OF HIGH QUALITY OF GRADE 18X2H4MA (18X2H4BA)

CHEMICAL COMPOSITION :- %

CARBON	=	0,14 -0,20
SILICON	=	0,17 - 0,25
CHROMIUM	=	1,35 - 1,65
NICKEL	=	4,00 - 4,40
MOLYBDENUM	=	0,30 - 0,40
TITANIUM	=	0,06 (MAX)
PHOSPHORUS	=	0,025 (MAX)
SULPHUR	=	0,025 (MAX)
COPPER	=	0,30 (MAX)

PHYSICAL PROPERTIES :-

YIELD POINT	=	85 Kgf/mm² (MIN)
ULTIMATE STRENGTH	=	115 Kgf/mm² (MIN)
RELATIVE ELONGATION	=	12 % (MIN)
RELATIVE REDUCTION ALONG CROSS - SECTION	=	50 % (MIN)
IMPACT STRENGTH	=	12 Kgfm/Cm² (MIN)

PILOT SAMPLE SHOULD BE APPROVED BY A H S P BEFORE BULK PRODUCTION.

EST WT 0,067 Kg.

TO BE STAMPED OR MARKED WHERE INDICATED THUS # LETTERS

ALL SHARP EDGES AND CORNERS TO BE REMOVED UNLESS OTHERWISE STATED MACHINED CORNERS TO HAVE R OUTSIDE R INSIDE EQUIVALENT CHAMFERS ARE PERMISSIBLE.

ISSUE	DATE	NATURE OF AMENDMENTS

DRN
CHD
TCD
APPD
DATE 20-5-88
SCALE :- 2:1
DIMENSIONS IN mm.
TOLERANCE ON DIMNS UNLESS OTHERWISE STATED IS 2102-69
ALL THREADS TO CONFORM TO

MATERIAL :- 18X2H4MA (18X2H4BA) GOST 4543-71

USED ON :- СБ 20-27-28-1

CONTROLLERATE OF QUALITY ASSURANCE (HEAVY VEHICLES) A V A D I

TITLE
FILTER BODY

D S CAT NUMBER

DRAWING NUMBER 20-27-332-2

DRAWING NUMBER
20-27-334

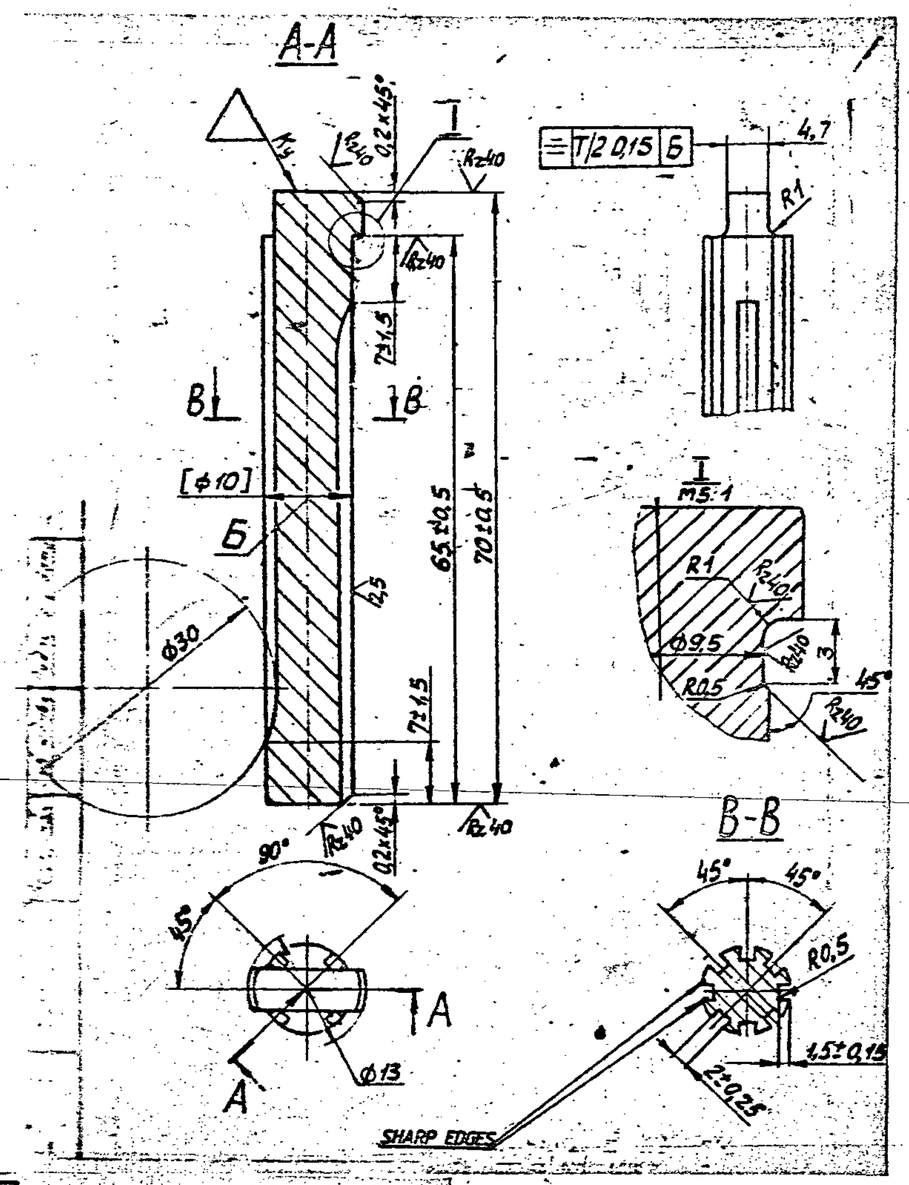

Rz80 (√)

7. EXPLANATORY NOTE :-

MATERIAL QUOTED :-

18X2H4MA (18X2H4BA) TO GOST 4543-71

CHROMIUM , NICKEL , MOLYBDENUM STEEL OF HIGH QUALITY OF GRADE 18X2H4MA (18X2H4BA)

CHEMICAL COMPOSITION :- %

CARBON	=	0,14 - 0,20
SILICON	=	0,17 - 0,25
CHROMIUM	=	1,35 - 1,65
NICKEL	=	4,00 - 4,40
MOLYBDENUM	=	0,30 - 0,40
TITANIUM	=	0,06 (MAX)
PHOSPHORUS	=	0,025 (MAX)
COPPER	=	0,30 (MAX)
SULPHUR	=	0,025 (MAX)

PHYSICAL PROPERTIES :-

YIELD POINT	=	85 Kgf/mm² (MIN)
ULTIMATE STRENGTH	=	115 Kgf/mm² (MIN)
RELATIVE ELONGATION	=	12 % (MIN)
RELATIVE REDUCTION ALONG CROSS - SECTION	=	50 % (MIN)
IMPACT STRENGTH	=	12 Kgfm/Cm² (MIN)

1. INSPECTION GROUP IV AS PER TECHNICAL REQUIREMENTS TT-11. H R C 33 TO 37.
2. UNSPECIFED LIMIT DEVIATIONS OF DIMENSIONS ARE AS FOLLOWS:
   FOR HOLES - AS PER A7,
   SHAFTS - AS PER B7,
   OTHERS - AS PER CM7.
3. SURFACE 5 SHULD BE FREE OF DAMAGE AND BURRS.
4. CUTTING TOOL MAY CUT IN LATERAL FACE OF PROJECTION 1 TO A DEPTH OF 0.7 mm.
5. STAMPING BY ELECTRO-CHEMICAL METHOD IS PERMITTED.
6. PERFORM MACHINING AS PER DIMENSIONS GIVEN IN SQUARE BRACKETS IN ASSEMBLY 20 - 27 - 28 - 1

PILOT SAMPLE SHOULD BE APPROVED BY A H S P BEFORE BULK PRODUCTION.

EST. WT. 0,043 Kg.

TO BE STAMPED OR MARKED WHERE INDICATED THUS # (LETTERS)

ALL SHARP EDGES AND CORNERS TO BE REMOVED UNLESS OTHERWISE STATED MACHINED CORNERS TO HAVE R OUTSIDE R INSIDE EQUIVALENT CHAMFERS ARE PERMISSIBLE

ISSUE	DATE	NATURE OF AMENDMENTS

DRN		MATERIAL :- 18X2H4MA (18X2H4BA) GOST 4543-71
CHD		USED ON :- СБ 20-27-28-1
TCD		CONTROLLERATE OF QUALITY ASSURANCE (HEAVY VEHICLES) A V A D I
APPD		
DATE	25 - 4 - 87	
SCALE :- 2 : 1		
DIMENSIONS IN mm.		TITLE FILTER ELEMENT
TOLERANCE ON DIMNS UNLESS OTHERWISE STATED IS 2102-69		
ALL THREADS TO CONFORM TO		D S CAT NUMBER
		DRAWING NUMBER 20-27-334

KVD No.- 66746

CB 20-27-28-1

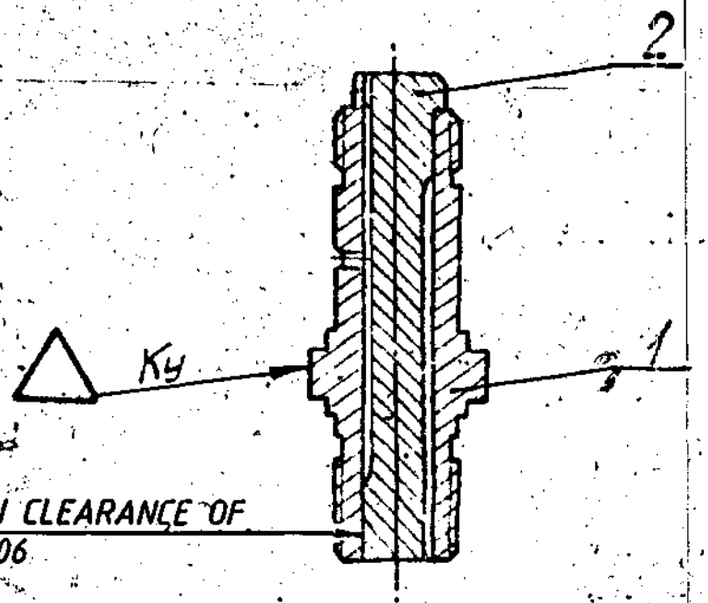

INSTALLATION CLEARANCE OF
0.03 TO 0.06

1. BEFORE ASSEMBLING ALL PARTS SHOULD BE THROUGHLY WASHED IN BENZINE WITH HAIR-BRUSH.

KVD NO 63401

FORMAT ZONE	REF. NO.	DESIGNATION	DESCRIPTION	QTY	REMARKS
	2	20-27-334	FILTERING ELEMENT	1	
	1	20-27-332-2	FILTER BODY	1	
			PARTS.		

PILOT SAMPLE SHOULD BE APPROVED BY A H S P BEFORE BULK PRODUCTION

EST. MASS 0,110 Kg

TO BE STAMPED OR MARKED WHERE INDICATED THUS (LETTERS)

ALL SHARP EDGES AND CORNERS TO BE REMOVED UNLESS OTHERWISE STATED MACHINED CORNERS TO HAVE R OUTSIDE R INSIDE EQUIVALENT CHAMFERS ARE PERMISSIBLE

ISSUE	DATE	NATURE OF AMENDMENTS

DRN

SCALE :- 1 : 1

CHD

DIMENSIONS IN mm

TCD

TOLERANCE ON DIMNS UNLESS OTHERWISE STATED

APPD

DATE 4-5-87

ALL THREADS CONFORM TO

MATERIAL :- —

USED ON :- CB 20-27-00-4

CONTROLLERATE OF INSPECTION (HEAVY VEHICLES) AVADI

TITLE :- FILTER

D S C/T NUMBER

DRAWING NUMBER CB 20-27-28-1

KVD No 63401