DRAWING NUMBER
CQA(HV)507714E

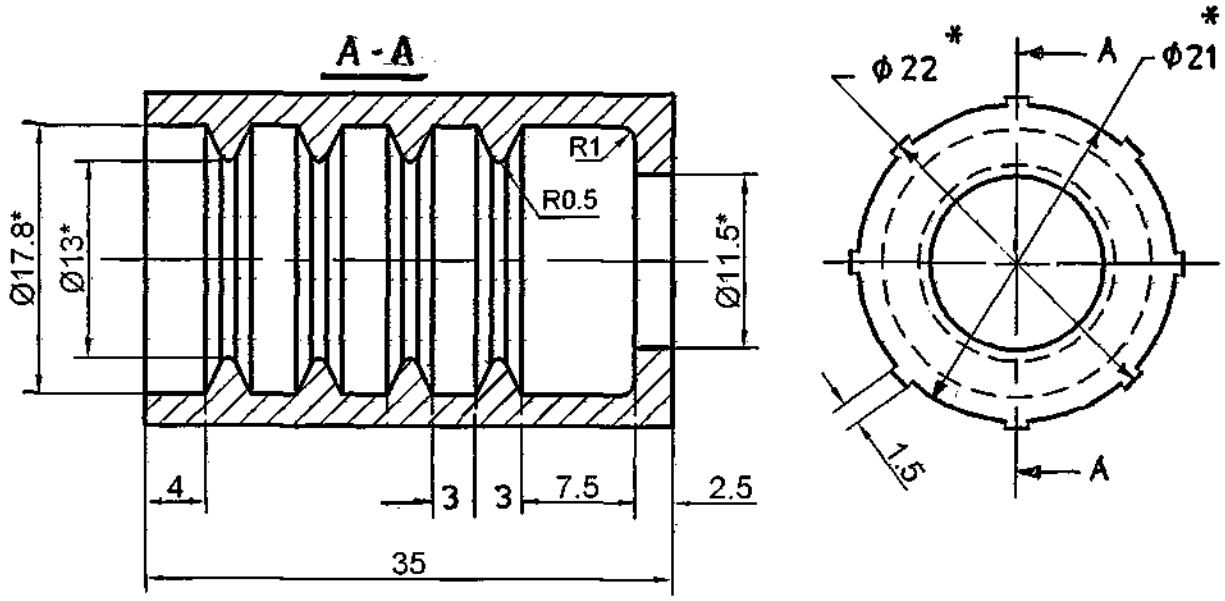

1. * DIMENSIONS AFTER ASSY.

2. COATING :- Cd9, CHROMATIZING AS PER INSTRUCTION ЦЦЛ.104 WITH ELIMINATION OF HYDROGEN EMBRITTLEMENT.

PILOT SAMPLE SHOULD BE APPROVED BY A H S P BEFORE BULK PRODUCTION.

ISSUE	DATE	NATURE OF AMENDMENTS

EST. WT.

TO BE STAMPED OR MARKED WHERE INDICATED THUS # (LETTERS)

ALL SHARP EDGES AND CORNERS TO BE REMOVED UNLESS OTHERWISE STATED MACHINED CORNERS TO HAVE R OUT-SIDE R INSIDE EQUIVALENT CHAMFERS ARE PERMISSIBLE.

MATERIAL :-
STEEL 220M07 (EN-1A)
TO BS:970 PT I-1983

USED ON :-
CQA(HV)507712E

DRN

CHD

TCD

APPD

DATE
29-11-08

SCALE :- 2 : 1

DIMENSIONS IN mm

TOLERANCE ON DIMENSIONS UNLESS OTHERWISE STATED IS : 2102 - 69

ALL THREADS TO CONFORM TO

CONTROLLERATE OF QUALITY ASSURANCE (HEAVY VEHICLES) AVADI

TITLE :-
COUPLING

D S CAT NUMBER

DRAWING NUMBER
CQA(HV)507714E

SIZE A4

DRAWING NUMBER
CQA(HV)507729E

SHEET No. 1 OF 1

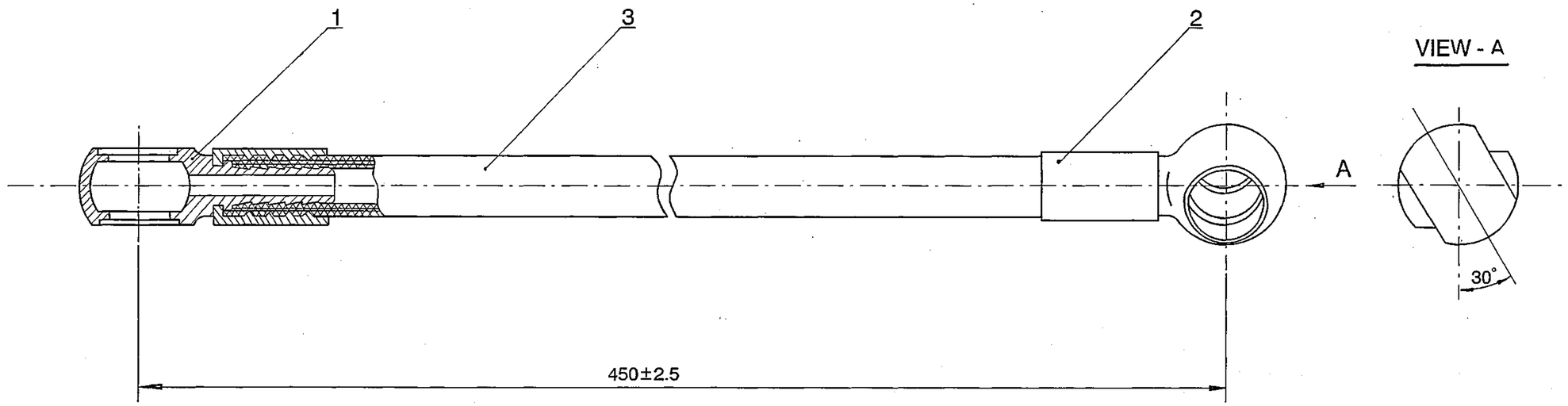

1. END CONNECTION SHALL BE FIXED WITH HOSE BY CRIMPING SUITING TO HOSE AND END CONNECTION REQUIREMENT.
2. DURING ASSEMBLY OF HOSE END PIECES, INNER SURFACES OF COUPLINGS AND MANDREL OF FIXTURE SHOULD BE ABUNDANTLY LUBRICATED WITH OIL USED FOR FILLING-UP ARTICLE OIL SYSTEM.
3. BEFORE CRIMPING THE ACCESSORIES IN THE HOSE, IT IS NECESSARY TO STRAIGHTEN THE HOSE ENDS WITH MANDREL.
4. TO BE PRESSURE TESTED WITH DIESEL FUEL AT A PRESSURE 1.5 MPa (15 Kgf/cm^2) FOR TWO MINUTES. DIESEL FUEL SHOULD BE DRAINED ; INNER AND OUTER SURFACES OF HOSE SHOULD BE BLOWN WITH COMPRESSED AIR.
5. *DIMENSIONS FOR REFERENCE.

DRAWING SUPERSEDES Cb 20-35-70-5
AUTHY:- 1st Alteration Commitee Meeting
Minutes Point No.1 Dt. 29.9.2004

PILOT SAMPLE SHOULD BE APPROVED BY A H S P BEFORE BULK PRODUCTION.

EST. WT. (Kg)	TO BE STAMPED OR MARKED WHERE INDICATED THUS # (LETTERS)

ALL SHARP EDGES AND CORNERS TO BE REMOVED UNLESS OTHERWISE STATED MACHINED CORNERS TO HAVE R OUT-SIDE R INSIDE EQUIVALENT CHAMFERS ARE PERMISSIBLE.

ISSUE	DATE	NATURE OF AMENDMENTS

DRN	
CHD	
APPD	
DATE	24-02-09
SCALE:-	1 : 1
DIMENSIONS IN mm	
TOLERANCE ON DIMNS UNLESS OTHERWISE STATED IS : 2102 - 69	
ALL THREADS TO CONFORM TO IS : 4218,PART-4.	

MATERIAL :- ——

USED ON :- Cb 20-35-00-5
Cb 20-27-00-4

CONTROLLERATE OF QUALITY ASSURANCE (HEAVY VEHICLES)
AVADI

TITLE :-
FLEXIBLE HOSE

D S CAT NUMBER

DRAWING NUMBER
CQA(HV)507729E

SIZE A2

DRAWING NUMBER
CQA(HV)507730E

SHEET No. 1 OF 1

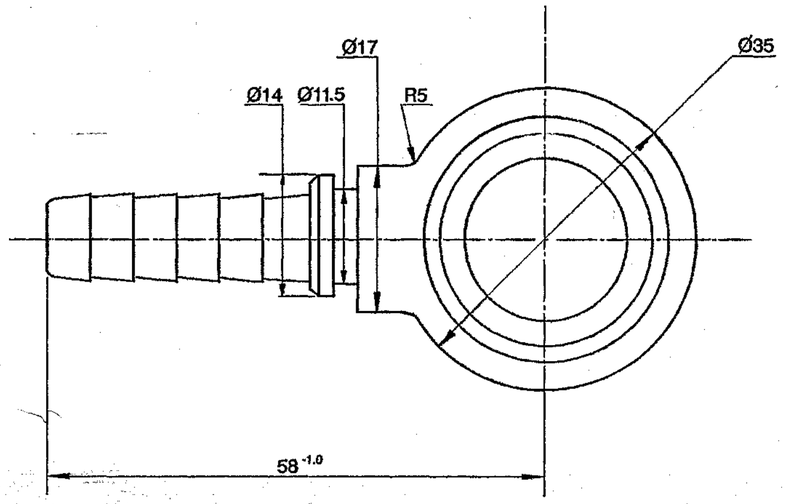

1. NON - PARALLELISM OF SURFACE "A" SHOULD NOT EXCEED 0.1mm.
2. VARIATION IN THICKNESS OF WALLS "B" & "T" SHOULD NOT EXCEED 0.5mm.
3. MISALIGNMENT AND SKEWNESS OF SHANK AXIS RELATIVE TO SURFACE "A" SHOULD NOT EXCEED 0.5mm ON A LENGTH OF THE SHANK.
4. CRACKS, BURRS, NOTCHES, DENTS AND OTHER MECHANICAL DEMAGE ARE NOT ALLOWED.
5. COATING Cd9, CHROMATIZING AS PER INSTRUCTION U,U,A-109 WITH ELIMINATION OF HYDROGEN EMBRITTLEMENT.

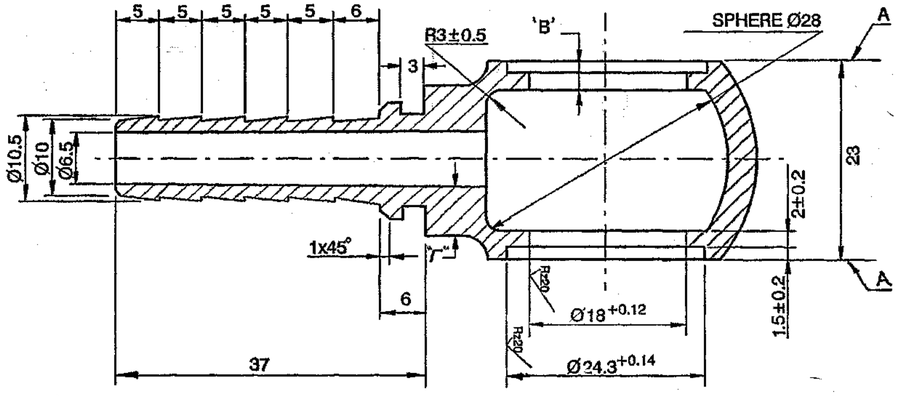

PILOT SAMPLE SHOULD BE APPROVED BY A H S P BEFORE BULK PRODUCTION.

EST. WT. (Kg)	TO BE STAMPED OR MARKED WHERE INDICATED THUS # (LETTERS)

ALL SHARP EDGES AND CORNERS TO BE REMOVED UNLESS OTHERWISE STATED MACHINED CORNERS TO HAVE R OUT-SIDE R INSIDE EQUIVALENT CHAMFERS ARE PERMISSIBLE.

ISSUE	DATE	NATURE OF AMENDMENTS

DRN	
CHD	
APPD	
DATE	24-02-09
SCALE:- 2 : 1	
DIMENSIONS IN mm	
TOLERANCE ON DIMNS UNLESS OTHERWISE STATED IS : 2102 - 69	
ALL THREADS TO CONFORM TO IS : 4218,PART-4.	

MATERIAL :- STEEL 220M07 (EN-1A) TO BS: 970 PT 1-1983

USED ON :- CQA(HV)507729E

CONTROLLERATE OF QUALITY ASSURANCE (HEAVY VEHICLES) AVADI

TITLE :- SWIVEL ELBOW

D S CAT NUMBER

DRAWING NUMBER CQA(HV)507730E

SIZE A2

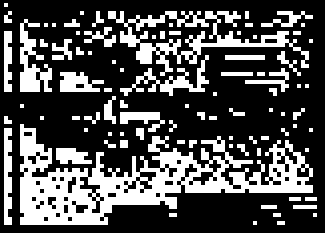

DRAWING NUMBER
CQA(HV)507731E

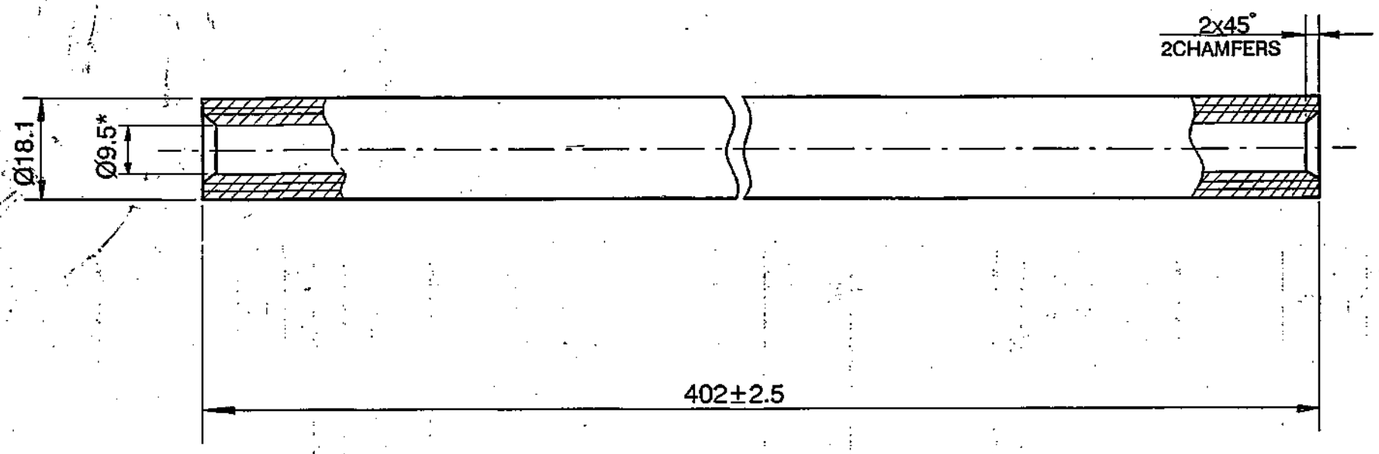

1. *DIMENSIONS FOR REFERENCE.

(A) MATERIAL PROPERTIES :-

1) I/D = 9,5 mm
2) O/D = 17,5 mm
3) TUBE: BLACK, OIL RESISTANT SYNTHETIC RUBBER (NITRILE)
4) REINFORCEMENT: ONE BRAID OF HIGH-TENSILE STEEL WIRE.
5) MINIMUM BEND RADIUS : 2,5" (63,5 mm)
6) LENGTH CHANGE ALLOWED IN SUPPLY CONDITION (TEST TO BE CONDUCTED AS PER SAE J 343 d) : +2% TO 4%
7) WORKING PRESSURE : 2250 Psi (155 bar)
8) PROOF PRESSURE : 4500 Psi (310 bar)
9) BURST PRESSURE : 9000 Psi (621 bar)
10) TEMPERATURE RANGE : -40°C TO +135°C
    INTERMITTANT TEMP. : +149°C (UPTO 10% OF OPERATING TIME)
11) ADHESION IN COVER TO BRAID : 1,8 Kgf/cm (MIN)
12) IMPULSE TEST (TEST TO BE CONDUCTED AS PER SAE J 343 d) : 1,50,000 CYCLES (MIN)

PILOT SAMPLE SHOULD BE APPROVED BY A H S P BEFORE BULK PRODUCTION.

EST. WT. (Kg)	TO BE STAMPED OR MARKED WHERE INDICATED THUS # (LETTERS)

ALL SHARP EDGES AND CORNERS TO BE REMOVED UNLESS OTHERWISE STATED MACHINED CORNERS TO HAVE R OUT-SIDE R INSIDE EQUIVALENT CHAMFERS ARE PERMISSIBLE.

ISSUE	DATE	NATURE OF AMENDMENTS
A	18-01-11	5th Alt, Comm Meeting Minutes Point No.11

DRN	
CHD	
APPD	
DATE	24-02-09
SCALE:-	1 : 1
DIMENSIONS IN mm	
TOLERANCE ON DIMNS UNLESS OTHERWISE STATED IS : 2102 - 69	
ALL THREADS TO CONFORM TO IS : 4218, PART-4.	

MATERIAL :- (A) REFER ABOVE

USED ON :- CQA(HV)507729E

CONTROLLERATE OF QUALITY ASSURANCE (HEAVY VEHICLES) AVADI

TITLE :- HOSE

D S CAT NUMBER

DRAWING NUMBER CQA(HV)507731E

SIZE A3

USED ON	ZONE	ITEM NO	DRAWING NUMBER	D S CAT NUMBER	DESCRIPTION	QTY	REMARKS
			CQA(HV)507729E		FLEXIBLE HOSE		
			& ITEM LIST				
Cb 20-35-00-5 Cb 20-27-00-4		1	CQA(HV)507730E		SWIVEL ELBOW	2	
		2	CQA(HV)507714E		COUPLING	2	
		3	CQA(HV)507731E		HOSE	1	

T/L SUPERSEDES Cb 20-35-70-5 I/L
AUTHY:- 1st Alteration Commitee Meeting
Minutes Point No.1 Dt. 29.9.2004

ISSUE	DATE	NATURE OF AMENDMENTS	ISSUE	DATE	NATURE OF AMENDMENTS

DRN		CONTROLLERATE OF QUALITY ASSURANCE (HEAVY VEHICLES) AVADI.		
CHD		TITLE : FLEXIBLE HOSE		
APPD				
DATE	24-02-09	SHT. NO. 1 OF 1.	D S CAT NUMBER	ITEM LIST FOR CQA(HV)507729E

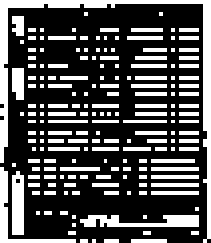

DRAWING NUMBER
20-15-650

Rz 40 (√)

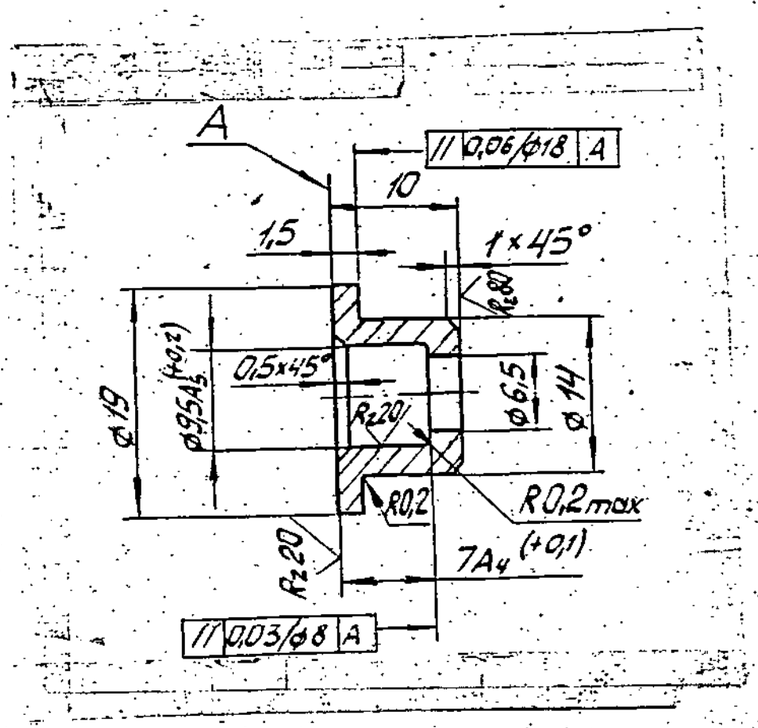

1. HRC3 30---- 35
2. NON- INDICATED LIMIT DEVIATIONS OF DIMENSIONS ARE OF : HOLES BY A7, SHAFTS BY B7, THE REST BY CM7
3. COATING : U3 xp. WITH FOLLOWING REMOVAL OF HYDROGEN EMBRITTLEMENT.

EXPLANATORY NOTE:-

MATERIAL QUOTED : 45X GOST 4543-71.

45X = GRADE OF CHROMIUM STEEL

CHEMICAL COMPOSITION :-

CARBON	= 0.41 - 0.49	
SILICON	= 0.17 - 0.37	
MANGANESE	= 0.50 - 0.80	
CHROMIUM	= 0.80 - 1.10	
PHOSPHORUS	= 0.035	MAXIMUM
SULPHUR	= 0.035	MAXIMUM
COPPER	= 0.30	MAXIMUM
NICKEL	= 0.30	MAXIMUM

MECHANICAL PROPERTIES :

ULTIMATE TENSILE STRENGTH Kgf/mm^2 = 105 (MIN)

YIELD POINT Kgf/mm^2 = 85 (MIN)

% RELATIVE ELONGATION = 9 (MIN)

% REDUCTION ACROSS SECTION = 45 (MIN)

IMPACT STRENGTH $Kgfm/cm^2$ = 5 (MIN)

PILOT SAMPLE SHOULD BE APPROVED BY A H S P BEFORE BULK PRODUCTION

EST. WT. 0.010 kg.

TO BE STAMPED OR MARKED WHERE INDICATED THUS # (LETTERS)

ALL SHARP EDGES AND CORNERS TO BE REMOVED UNLESS OTHERWISE STATED MACHINED CORNERS TO HAVE R OUT SIDE R INSIDE EQUIVALENT CHAMFERS ARE PERMISSIBLE.

ISSUE	DATE	NATURE OF AMENDMENTS

DRN	
CHD	
TCD	
APPD	
DATE	25-7-86
SCALE:-	2:1
DIMENSIONS IN mm	
TOLERANCE ON DIMNS UNLESS OTHERWISE STATED IS : 2102-69.	
ALL THREADS TO CONFORM TO	

MATERIAL:- 45X GOST 4543-71

USED ON CE 20-15-660-1

CONTROLLERATE OF QUALITY ASSURANCE (HEAVY VEHICLES) AVADI.

TITLE SPRING SLEEVE

D S CAT NUMBER

DRAWING NUMBER 20-15-650

SIZE A3

DRAWING NUMBER
20-15-651-1

Rz 40/(√)

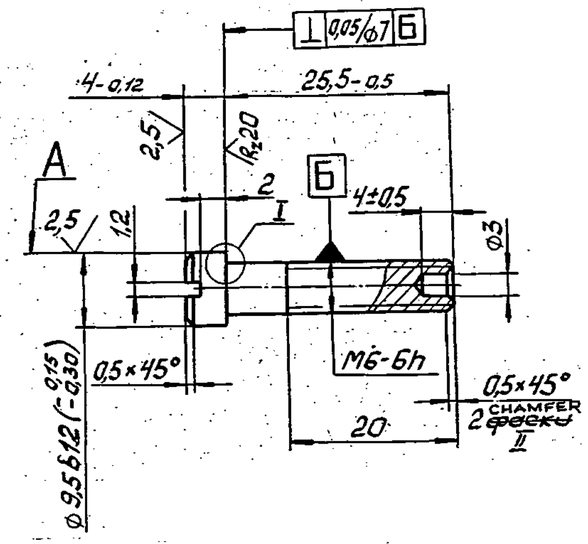

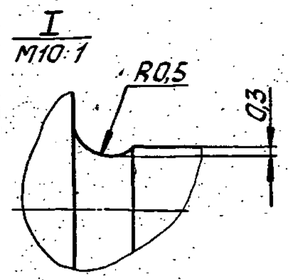

EXPLANATORY NOTE:-

MATERIAL QUOTED: 38XA GOST 4543-71

38XA = GRADE OF STEEL

CHEMICAL COMPOSITION %

CARBON = 0.35-0.42
SILICON = 0.17-0.37
MANGANESE = 0.50-0.80
CHROMIUM = 0.80-1.10
PHOSPHORUS = 0.025
SULPHUR = 0.025
COPPER = 0.30
NICKEL = 0.30
} MAXIMUM

MECHANICAL PROPERTIES:

ULTIMATE STRENGTH Kgf/mm² (MIN) = 95
YIELD POINT Kgf/mm² (MIN) = 80
RELATIVE ELONGATION % (MIN) = 12
RELATIVE REDUCTION ALONG CROSS SECTION % (MIN) = 50
IMPACT STRENGTH Kgfm/cm² (MIN) = 9

NOTE:-

1. HRC3 30 ---- 35.
2. NON-INDICATED LIMIT DEVIATIONS OF DIMENSIONS ARE OF: HOLES BY H14, SHAFTS BY h14, THE REST BY $\pm\frac{IT14}{2}$.
3. NON-PARALLELISM, DISPLACEMENT AND SKEWNESS IN SUM OF Б THREAD AND 'A' SURFACE IS 0.05 mm, MAX. (DEPENDENT ALLOWANCE)
4. COATING: U3 xp. WITH FOLLOWING REMOVAL OF HYDROGEN EMBRITTLEMENT.

EXPLANATORY NOTE ADDED ON 10-3-92

PILOT SAMPLE SHOULD BE APPROVED BY A H S P BEFORE BULK PRODUCTION.

EST. WT. 0.007 kg	TO BE STAMPED OR MARKED WHERE INDICATED THUS (LETTERS)
ALL SHARP EDGES AND CORNERS TO BE REMOVED. UNLESS OTHERWISE STATED MACHINED CORNERS TO HAVE R OUT-SIDE R INSIDE. EQUIVALENT CHAMFERS ARE PERMISSIBLE.	

ISSUE	DATE	NATURE OF AMENDMENTS

DRN		MATERIAL :- 38 XA GOST 4543-71	USED ON CB 20-15-660-1
CHD			
TCD			
APPD			
DATE	25-7-86	CONTROLLERATE OF QUALITY ASSURANCE (HEAVY VEHICLES) AVADI	
SCALE :- 2:1			
DIMENSIONS IN mm			
TOLERANCE ON DIMNS UNLESS OTHERWISE STATED IS 2102-69		TITLE : CORRECTOR STEM	
ALL THREADS TO CONFORM TO		D S CAT NUMBER	DRAWING NUMBER 20-15-651-1

SIZE A2

20-15-652-1

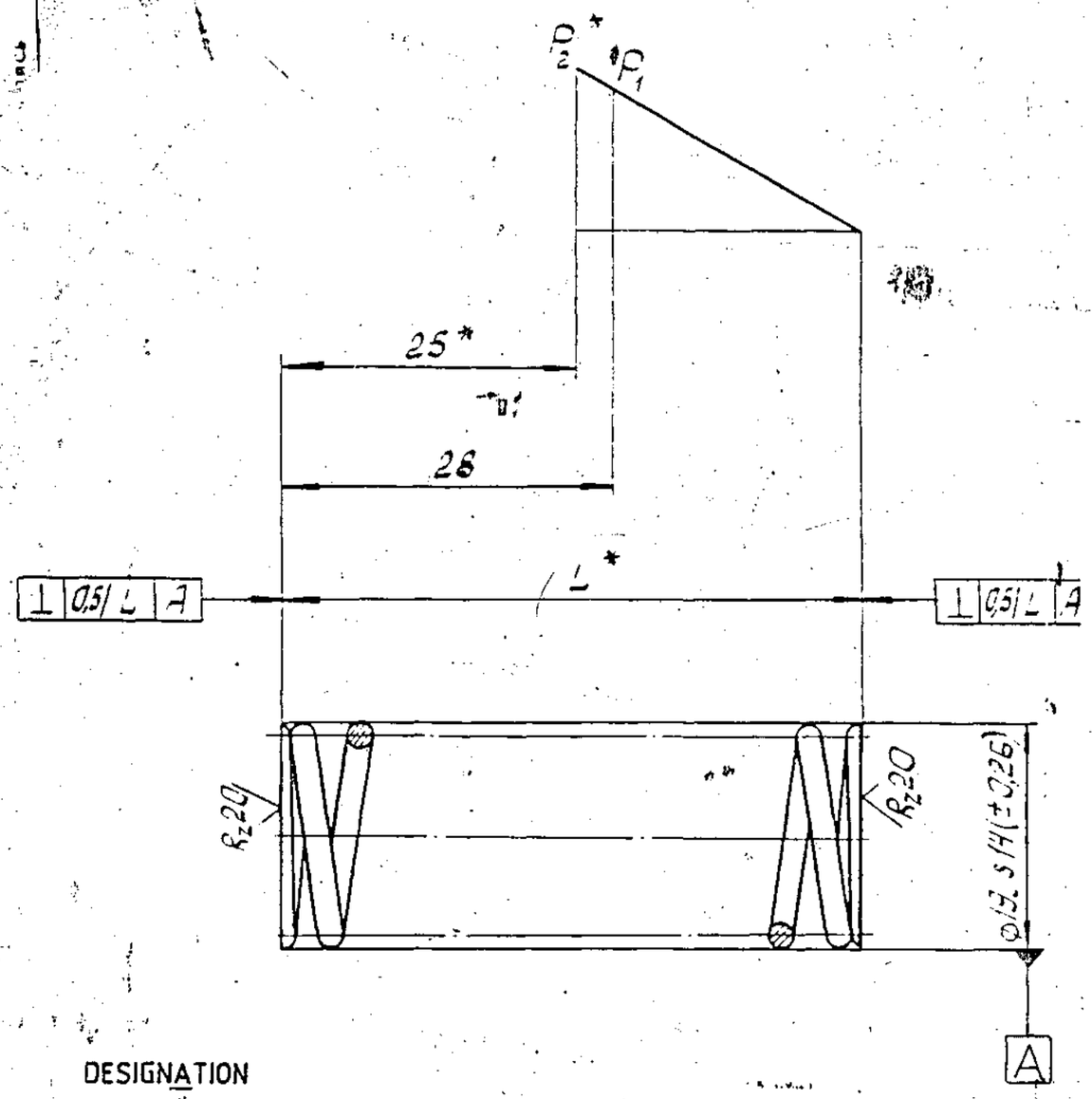

1. LENGTH OF UNFOLDED SPRING IS L ≈ 530mm.
2. NUMBER OF TURNS IN $n = 7.5$
3. FULL NUMBER OF TURNS IS $n_1 = 9.5 \pm 0.5$
4. WINDING DIRECTION IS RIGHT-HAND
5. LENGTH OF MACHINED SURFACE IS NO LESS THAN 0.7 OF CIRCUMFERENCE LENGTH.
6. CLEARANCE BETWEEN SUPPORTING TURN END AND NEIGHBOURING WORKING TURN IS 0.2 mm MAx.
7. NON-UNIFORMITY OF WORKING TURN STEP IS 0.4 mm MAx.
8. COATING : Ц9 хр WITH FOLLOWING REMOVAL OF HYDROGEN EMBRITTLEMENT
9. COATING ABSENCE IS ALLOWED BETWEEN SUPPORTING TURN END AND NEIGHBOURING WORKING TURN
10. * DIMENSIONS FOR INFORMATION
11. INCREASING OF SUPPORTING TURN DIAMETER IS ALLOWED TO 19.5 mm

DESIGNATION

Обозначение	P_1 кгс	P_2 кгс	L
20-15-652-1	$17^{+1.5}_{-0.5}$	19,2	49
[redacted]			

PILOT SAMPLE SHOULD BE APPROVED BY A H S P BEFORE BULK PRODUCTION

ISSUE	DATE	NATURE OF AMENDMENTS	
DRN		SCALE - 2:1	
CHD		DIMENSIONS IN mm	
TCD		TOLERANCE ON DIMNS UNLESS OTHERWISE STATED	
APPD			
DATE 25.9.86		ALL THREADS CONFORM TO	

EST. MASS 0,016 Kg

TO BE STAMPED OR MARKED WHERE INDICATED THUS * LETTERS)

ALL SHARP EDGES AND CORNERS TO BE REMOVED UNLESS OTHERWISE STATED MACHINED CORNERS TO HAVE R OUTSIDE R INSIDE EQUIVALENT CHAMFERS ARE PERMISSIBLE

MATERIAL - WIRE II-2.3 GOST-9389-75

USED ON:- СБ 20-15-660-1

CONTROLLERATE OF INSPECTION (HEAVY VEHICLES) AVADI

TITLE.- CORRECTOR SPRING

D S CAT NUMBER

DRAWING NUMBER 20-15-652-1

DRAWING NUMBER
20-15-653

Rz40 √ (√)

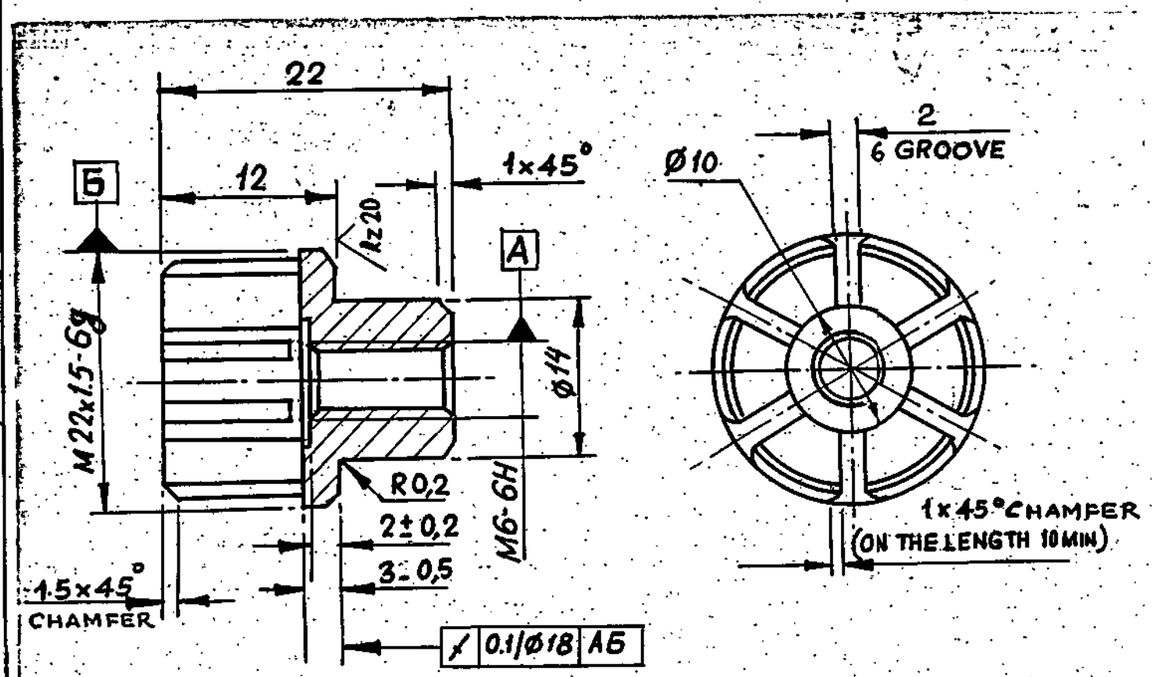

1. NON-INDICATED LIMIT DEVIATIONS OF DIMENSIONS ARE OF HOLES BY A_7, SHAFTS BY B_7, THE REST BY CM_7.
2. DISPLACEMENT OF GROOVE AXIS FROM DIAMETRAL PLANE OF Б THREAD IS NO MORE THAN 0.15 mm (DEPENDENT ALLOWANCE)
3. COATING : Ц3.хр. WITH FOLLOWING REMOVAL OF HYDROGEN EMBRITTLEMENT.
4. COATING BREAKING IS ALLOWED ON THREAD SURFACES.

EXPLANATORY NOTE:

MATERIAL QUOTED : 20 GOST 1050-74
20 GRADE OF STEEL

CHEMICAL COMPOSITION %

CARBON = 0.17-0.24
SILICON = 0.17-0.37
MANGANESE = 0.35-0.65

CHROMIUM = 0.25
COPPER = 0.25
NICKEL = 0.25
SULPHUR = 0.040
PHOSPHORUS = 0.035
} MAXIMUM

MECHANICAL PROPERTIES:

TENSILE STRENGTH Kgf/mm² = 42 (MIN)
YIELD POINT Kgf/mm² = 25 (MIN)
ELONGATION % = 25 (MIN)
REDUCTION IN AREA % = 55 (MIN)

EXPLANATORY NOTE ADDED 8-6-92

PILOT SAMPLE SHOULD BE APPROVED BY A H S P BEFORE BULK PRODUCTION

EST. WT. 0.030 kg.

TO BE STAMPED OR MARKED WHERE INDICATED THUS # (LETTERS)

ALL SHARP EDGES AND CORNERS TO BE REMOVED UNLESS OTHERWISE STATED MACHINED CORNERS TO HAVE R OUT SIDE R INSIDE EQUIVALENT CHAMFERS ARE PERMISSIBLE.

ISSUE	DATE	NATURE OF AMENDMENTS

DRN
CHD
TCD
APPD
DATE 25-9-86
SCALE:- 2:1
DIMENSIONS IN mm
TOLERANCE ON DIMNS UNLESS OTHERWISE STATED IS : 2102-69.
ALL THREADS TO CONFORM TO

MATERIAL:- 20 GOST 1050-74

USED ON CБ 20-15-660-1

CONTROLLERATE OF QUALITY ASSURANCE (HEAVY VEHICLES) AVADI.

TITLE CORRECTOR NUT

D S CAT NUMBER

DRAWING NUMBER 20-15-653

SIZE A3

DRAWING NUMBER
СБ 20-15-660-1

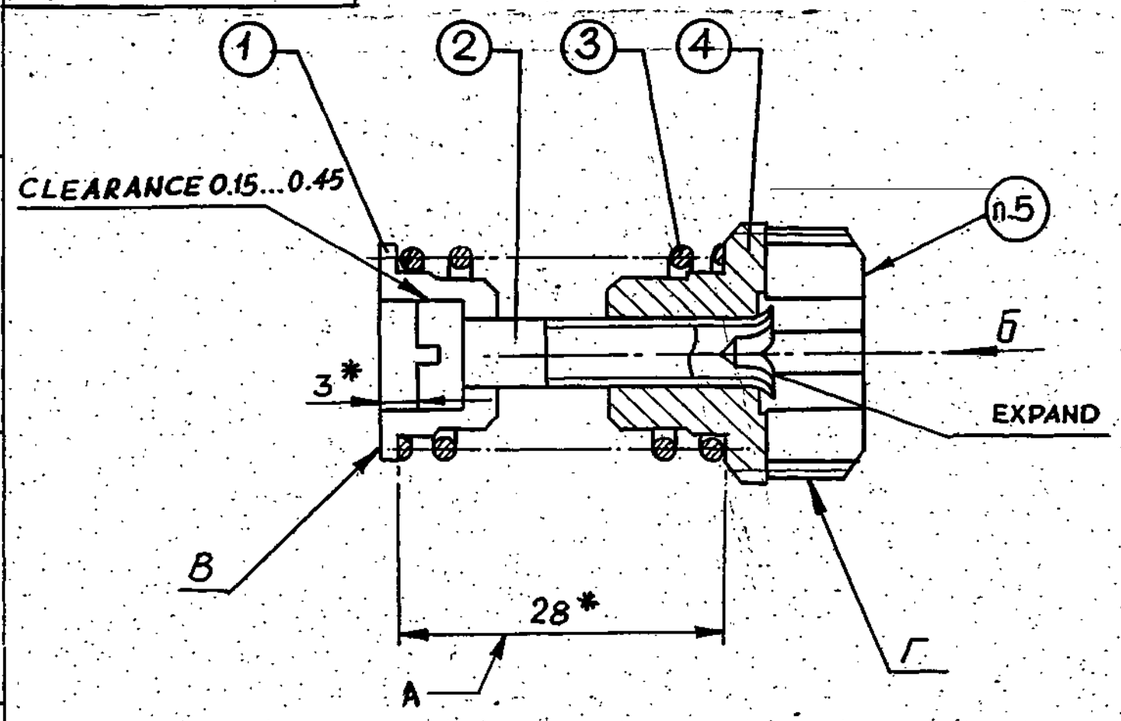

VIEW Б

SPLIT PIN TWO PLACES

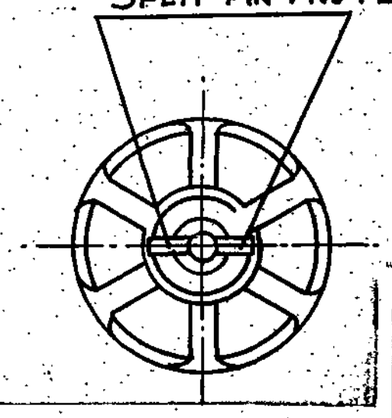

1. ADJUST FORCE OF SPRING COMPRESSION BY CHANGE OF 'A' DIMENSION. DEFORMATION OF ADJUSTED CORRECTOR SHOULD BE 0.3±0.2mm WHEN LOADING IS P = 17.3 Kgf.
2. RUN OUT OF 'B' ENDFACE RELATIVE TO AXIS OF 'r' THREAD IS 0.2 mm MAX. ON 18 mm DIA. IT IS ALLOWED TO PROVIDE BY STRAIGHTENING OF ROD (Pos.2).
3. SEIZING OF SLEEVE (Pos.1) IS NOT ALLOWED WHEN MOVING ALONG ROD (Pos.2)
4. *DIMENSIONS FOR INFORMATION.
5. MARK DISTINCTIVE SIGN WITH WHITE ENAMEL.

NOTE ABLEC ON 10-6-14

PILOT SAMPLE SHOULD BE APPROVED BY A H S P BEFORE BULK PRODUCTION

EST. WT. 0.063 kg.

TO BE STAMPED OR MARKED WHERE INDICATED THUS # (LETTERS)

ALL SHARP EDGES AND CORNERS TO BE REMOVED UNLESS OTHERWISE STATED MACHINED CORNERS TO HAVE R OUT SIDE R INSIDE EQUIVALENT CHAMFERS ARE PERMISSIBLE.

ISSUE	DATE	NATURE OF AMENDMENTS

DRN	—
CHD	
TCD	
APPD	
DATE	24-9-86
SCALE:-	2:1
DIMENSIONS IN mm	
TOLERANCE ON DIMNS UNLESS OTHERWISE STATED IS : 2102-69.	
ALL THREADS TO CONFORM TO	

MATERIAL:- —

USED ON СБ 20-27-00-4

CONTROLLERATE OF QUALITY ASSURANCE (HEAVY VEHICLES) AVADI.

TITLE CORRECTOR

D S CAT NUMBER

DRAWING NUMBER СБ 20-15-660-1

SIZE A3

USED ON

CB 20 -27-00-4

ITEM	DRAWING NUMBER	D S CAT NUMBER	DESCRIPTION	No. OFF	REMARKS
	CB 20-15-660-1		CORRECTOR		
	& ITEM LIST				
1	20-15-650		SPRING SLEEVE	1	
2	20-15-651-1		CORRECTOR ROD	1	
3	20-15-652-1		CORRECTOR SPRING	1	
4	20-15-653		CORRECTOR NUT	1	

ISSUE	DATE	NATURE OF AMENDMENTS	ISSUE	DATE	NATURE OF AMENDMENTS

DRN		CONTROLLERATE OF INSPECTION(HEAVY VEHICLES) AVADI		
CHD	Val	TITLE: CORRECTOR		
TCD				
APPD		SHT. No 1 OF 1	D S CAT NUMBER	ITEM LIST FOR CB 20-15-660-1
DATE	26-9-86			

DRAWING NUMBER
20-15-683

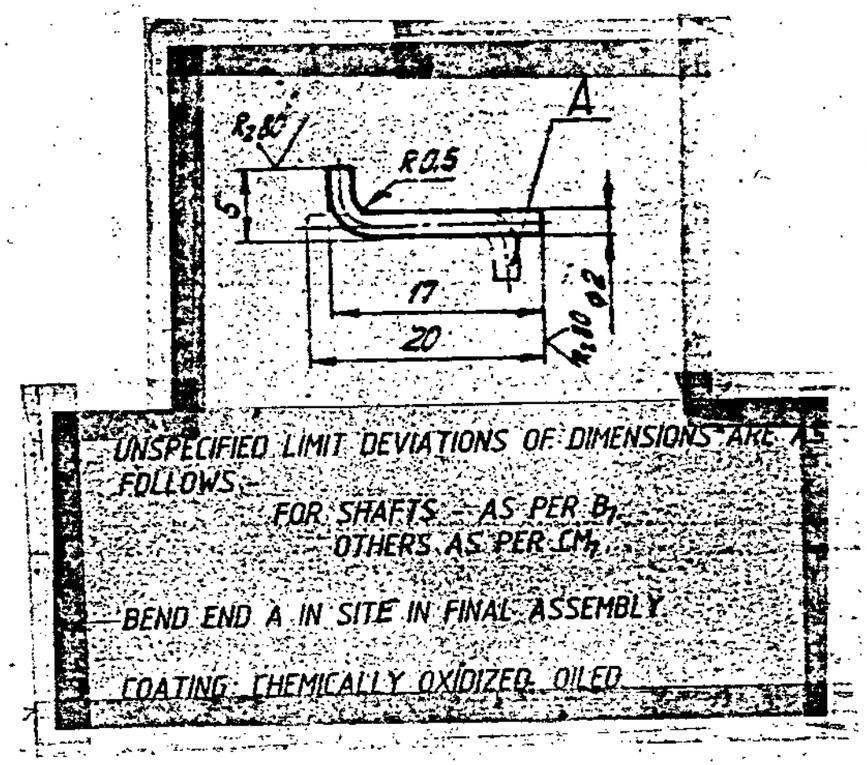

EXPLANATORY NOTE:

Material Quoted: wire KC2 GOST 792-67

Wire : Low carbon quality wire.

KC2 : Bright-without coating

Chemical Composition % as per GOST 1050-74 (Grade 10 prefered)

C	Si	Mn	Cr	P	S	Cu.	Ni
0.07-	0.17-	0.35-	MAXIMUM				
0.14	0.37	0.65	0.15	0.035	0.040	0.25	0.25

Mechanical Properties: as per GOST 792-67

1. Tensile strength kgf/mm^2 (min) = 40
2. Dia. of roller (mm) = 10
3. No. of twists at 360° (min) = 18
4. No. of bends at 180° (min) = 11

PILOT SAMPLE SHOULD BE APPROVED BY A H S P BEFORE BULK PRODUCTION

EST. WT. 0.0004 kg.

TO BE STAMPED OR MARKED WHERE INDICATED THUS # (LETTERS)

ALL SHARP EDGES AND CORNERS TO BE REMOVED UNLESS OTHERWISE STATED MACHINED CORNERS TO HAVE R OUT SIDE R: INSIDE EQUIVALENT CHAMFERS ARE PERMISSIBLE.

ISSUE	DATE	NATURE OF AMENDMENTS

DRN
CHD
TCD
APPD
DATE 20.4.89
SCALE:- 2:1
DIMENSIONS IN mm
TOLERANCE ON DIMNS UNLESS OTHERWISE STATED IS:2102-69
ALL THREADS TO CONFORM TO

MATERIAL:- WIRE KC2 GOST 792-67

USED ON CG 20-15-662-5

CONTROLLERATE OF QUALITY ASSURANCE(HEAVY VEHICLES) AVADI

TITLE LOCKING WIRE

D.S CAT NUMBER

DRAWING NUMBER 20-15-683

KVD. No. 63462

SIZE A3

DRAWING NUMBER
315-622-2

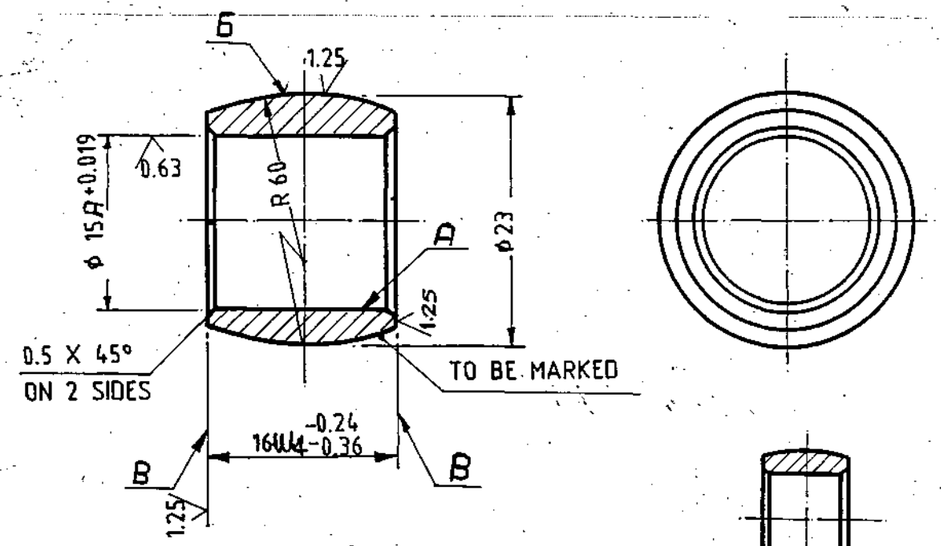

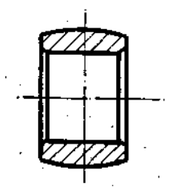

SCALE 1 : 1

1. INSPECTION GROUP III, TT-11.
2. DIMENSIONS WITH UNSPECIFIED TOLERANCES SHOULD BE OBTAINED AS PER A7 OR B7 OST 1010.
3. (A) ~~HRC = 60 - 63.~~ HRC 61..... 64
4. RUN-OUT OF SURFACES "B" RELATIVE TO SURFACE "A" SHOULD NOT EXCEED AT DIA. 18mm.
5. RUN-OUT OF SURFACE "Б" RELATIVE TO SURFACE "A" SHOULD NOT EXCEED 0.05mm.
6. SHIFT OF SPHERE CENTRE FROM THE AXIS OF SYMMETRY OF SURFACES "B" SHOULD NOT EXCEED 0.3mm.
7. SHARP EDGES SHOULD BE BLUNTED.
8. COATING :-CHEMICAL OXIDIZING, OIL FINISHING.

EXPLANATORY NOTE :

(B) MATERIAL QUOTED: STEEL ШX15 GOST 801-78.

BALL BEARING STEEL WITH CHROMIUM (X) CONTENT 1.5% BY WEIGHT.

a) CHEMICAL COMPOSITION :

CARBON	= 0.95 - 1.05	COPPER	= 0.25 (max)
SILICON	= 0.17 - 0.37	NICKEL & COPPER	= 0.50 (max)
MANGANESE	= 0.20 - 0.40		
CHROMIUM	= 1.30 - 1.65		
SULPHUR	= 0.02 (max)		
PHOSPHORUS	= 0.027 (max)		
NICKEL	= 0.30 (max)		

* ROUND BLANK 25.5-Г-4 GOST 14955-77 / ШX 15-0-XB GOST 801-78 (B)

(C) EQUIVALENT MATERIAL
STEEL 535A99 (EN31) TO BS: 970/103
CR 2 TO IS 4399-72

PILOT SAMPLE SHOULD BE APPROVED BY A H S P BEFORE BULK PRODUCTION

EST WT 0.0267 Kg

TO BE STAMPED OR MARKED WHERE INDICATED THUS # (LETTERS)

ALL SHARP EDGES AND CORNERS TO BE REMOVED UNLESS OTHERWISE STATED MACHINED CORNERS TO HAVE R OUTSIDE R INSIDE EQUIVALENT CHAMFERS ARE PERMISSIBLE

ISSUE	DATE	NATURE OF AMENDMENTS
C	10-7-10	4th ALT. COMM. MEETING MINUTES POINT No 8 DT. 26-10-09
B	7-7-93	AUTHY. NOTN. No. BK. 88-304
A	7.12.87	AUTHY BK 82-394.

DRN
CHD
TCD
APPD
DATE 08-5-86
SCALE 2 : 1
DIMENSION IN mm
TOLERANCE ON DIMNS UNLESS OTHERWISE STATED
ALL THREADS TO CONFORM TO

MATERIAL SEE ABOVE * ~~ШX-15 GOST 801-78~~ (B)

USED ON CG 315-662-3

CONTROLLERATE OF INSPECTION(HEAVY VEHICLES) AVADI

TITLE ROLLER

D S CAT NUMBER

DRAWING NUMBER 315-622-2

DRAWING INDIANISED BASED ON ISSUE 3.

KVD NO 78288

(A 6)

SIZE A3

DRAWING NUMBER
315-635-1

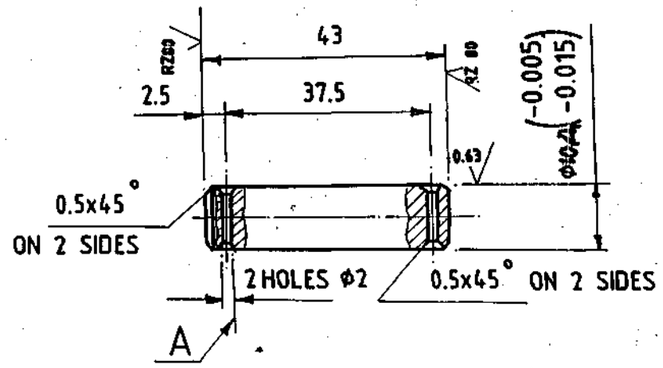

1. INSPECTION GROUP III T T-11
2. TO BE CARBURIZED h 0.7 TO 1.2 mm.
3. HARDNESS ~~HRC≥58~~. HRC э ≥ 59
4. DIMENSION WITH UNSPECIFIED TOLERANCE SHOULD BE OBTAINED AS PER ACCURACY CLASS-7 OST 1010.
5. SURFACE 'A' SHOULD BE PROTECTED FROM CASE HARDENING.
6. COATING :- CHEMICAL OXIDIZING, OIL FINISHING.

EXPLANATORY NOTE :-

Rz40 (✓)

MATERIAL QUOTED : STEEL 12XH3A TY 14-1-381-72.
CHROMIUM-NICKEL STEEL

12XH3A = GRADE OF STEEL.

CHEMICAL COMPOSITION : % (AS PER GOST 4543-71)

CONTENT OF ELEMENTS %								
C	Si	Mn	Cr	Ni	P	S	Cu	Ni
					MAXIMUM			
0·09 – 0·16	0·17 – 0·37	0·30 – 0·60	0·60 – 0·90	2·75 – 3·15	0·035	0·035	0·30	0·30

MECHANICAL PROPERTIES:

a) HARDENING : (i) FIRST HARDENING OR NORMALIZING = 860°C.
(ii) SECOND HARDENING = 760-810 °C.
(iii) COOLING MEDIUM = WATER OR OIL.

b) TEMPERING : (i) TEMPERATURE °C = 180.
(ii) COOLING MEDIUM = AIR OR OIL.

c) YIELD POINT Kgf/mm² (MIN) = 70

d) ULTIMATE TENSILE STRENGTH Kgf/mm² (MIN) = 95

e) RELATIVE ELONGATION % (MIN) = 11

f) RELATIVE REDUCTION ALONG ACROSS SECTION = 55

g) IMPACT STRENGTH Kgf.m/cm² (MIN) (MIN) = 9

PILOT SAMPLE SHOULD BE APPROVED BY A H S P BEFORE BULK PRODUCTION

EST. WT 0.025 Kg

TO BE STAMPED OR MARKED WHERE INDICATED THUS # (LETTERS)

ALL SHARP EDGES AND CORNERS TO BE REMOVED UNLESS OTHERWISE STATED MACHINED CORNERS TO HAVE R OUTSIDE R INSIDE EQUIVALENT CHAMFERS ARE PERMISSIBLE

ISSUE	DATE	NATURE OF AMENDMENTS
A	7.12.87	AUTHY BK 62-394.

DRN
CHD
TCD
APPD
DATE 09-5-86
SCALE : 1 : 1
DIMENSIONS IN mm
TOLERANCE ON DIMNS UNLESS OTHERWISE STATED
ALL THREADS TO CONFORM TO

MATERIAL : STEEL 12XH3A TY 14-1-381-72

USED ON CB 315-662-3 CB-20-15-662-5

CONTROLLERATE OF INSPECTION (HEAVY VEHICLES) AVADI

TITLE STOP PIN

D S CAT NUMBER

DRAWING NUMBER 315-635-1

DRAWING INDIANISED BASED ON ISSUE 3

KVD NO 63500

A6

SIZE A3

DRAWING NUMBER
353 07 1

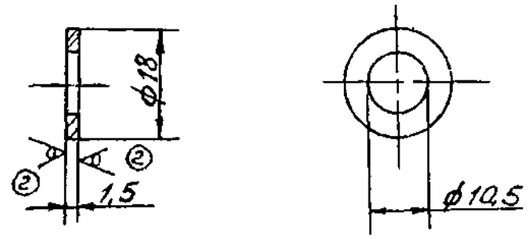

(7)

2. Dimensions with unspecified tolerances - as per Standard 82050-16.
3. The component should be straightened after stamping. Burrs are not allowed.
6. Coating : Cd9, chromatizing as per ugal-104 with elimination of Hydrogen embrittlement.
7. Alternate material :- Steel, grades 15, GOST 1050-74.
8. Required finishing of surfaces being stamped should be ensured by tool.

EXPLANATORY NOTE:

REFERENCE MATERIAL QUOTED :

COLD ROLLED LOW CARBON STEEL STRIP HIGHLY COLD WORK 'B H' SURFACE QUALITY GROUP '2' WITH TRIMMED EDGES NORMAL MANUFACTURING ACCURACY 1.5 (-0,11) mm THICK TO GOST 503-71 AND MANUFACTURED IN ACCORDANCE WITH QUALITY CARBON STRUCTURAL STEEL GRADE 10 TO GOST 1050-74 AND REFERENCE NOTE 7 ON ALTERNATE MATERIAL QUALITY CARBON STRUCTURAL STEEL STRIP STEEL GRADE 15 TO GOST 1050-74.

a) CHEMICAL COMPOSITION AS PER GOST 1050-74.

GRADE OF STEEL	CONTENT OF ELEMENTS %						REMARKS
	C	Si	Mn	Cr	S	P	
				MAXIMUM			
10	0.07 - 0.14	0.17 - 0.37	0.35 - 0.65	0.15	0.040	0.035	Ref. Matl.
15	0.12 - 0.19	0.17 - 0.37	0.35 - 0.65	0.25	0.040	0.035	Alt. Matl.

RESIDUAL CONTENT OF COPPER AND NICKEL SHOULD NOT EXCEED 0.25 % EACH.

b) i MECHANICAL PROPERTIES : FOR 'BH' CONDITION AS PER GOST 503-71.

ULTIMATE TENSILE STRENGTH - - - - - 55 Kgf/mm^2 (Min)

ii MECHANICAL PROPERTIES AS PER GOST 1050-74.

CONDITION OF MATERIAL	GRADE OF STEEL	U T S Kgf/mm^2	YIELD POINT Kgf/mm^2	ELONGATION %	REDUCTION IN AREA %	REMARKS
NORMALIZED	15	38	23	27	55	Alt. Matl.

(A) EQUIVALENT MATERIAL
Gr. O IS:513-1994

PILOT SAMPLE SHOULD BE APPROVED BY A H S P BEFORE BULK PRODUCTION.

EST WT	TO BE STAMPED OR MARKED WHERE INDICATED THUS # (LETTERS)
0.002 Kg	

ALL SHARP EDGES AND CORNERS TO BE REMOVED UNLESS OTHERWISE STATED MACHINED CORNERS TO HAVE R OUTSIDE R INSIDE EQUIVALENT CHAMFERS ARE PERMISSIBLE

ISSUE	DATE	NATURE OF AMENDMENTS
A	19-5-10	4th Alt.Comm.Mt.Minutes Pt.No.2 Dt.26.10.09

DRN
CHD
TCD
APPD
DATE 05-6-86
SCALE : 1 : 1
DIMENSIONS IN mm
TOLERANCE ON DIMNS UNLESS OTHERWISE STATED IS : 2102-69
ALL THREADS TO CONFORM TO

MATERIAL
GOST 503-71
STRIP 10-BH-2-1.5

USED ON
CG 3335 00 30 24

CONTROLLERATE OF INSPECTION (HEAVY VEHICLES) AVADI

TITLE
BRIGHT WASHER 10

D S CAT NUMBER

DRAWING NUMBER
353 07 1

KVD No. - 786 75

(A-11)

SIZE A3

at

CB 20-15-662-5

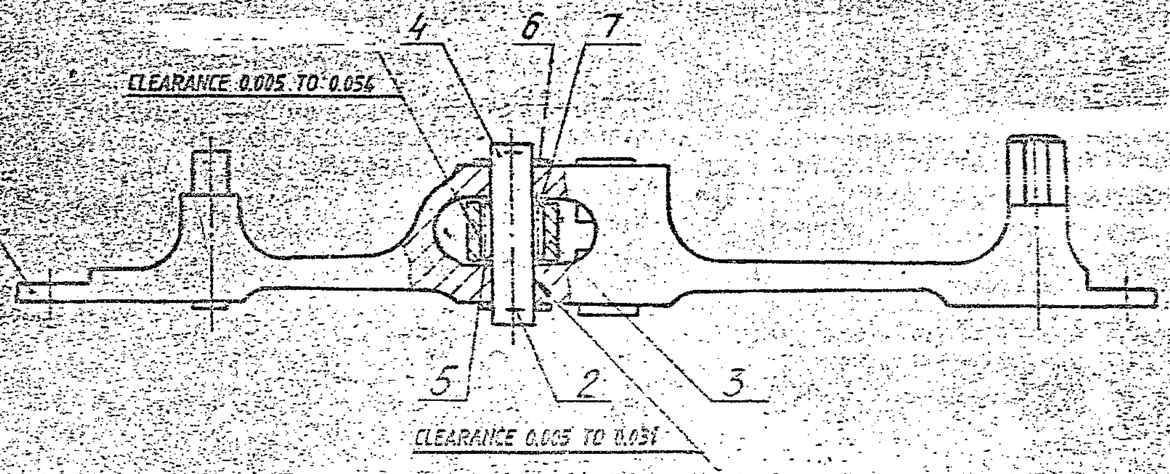

1. BEFORE ASSEMBLING ALL PARTS SHOULD BE WASHED THOROUGHLY AND BLOWED WITH COMPRESSED AIR.
2. WHEN THE LEVER IS ASSEMBLED ROLLERS (REF. NO. 7) SHOULD HAVE DIMENSIONS OF NOT MORE THAN 0.003 mm.
3. ROLLER (REF. NO. 3) SHOULD ROTATE WITHOUT SEIZING.

PILOT SAMPLE SHOULD BE APPROVED BY A H S P BEFORE BULK PRODUCTION

			EST. MASS 0,514 Kg	TO BE STAMPED OR MARKED WHERE INDICATED THUS ⊕ (LETTERS)
			ALL SHARP EDGES AND CORNERS TO BE REMOVED UNLESS OTHERWISE STATED MACHINED CORNERS TO HAVE R OUTSIDE R INSIDE EQUIVALENT CHAMFERS ARE PERMISSIBLE	
ISSUE	DATE	NATURE OF AMENDMENTS	MATERIAL :- ———	USED ON :- CB 20-27-00-4
DRN		SCALE :- 1 : 1		
CHD		DIMENSIONS IN mm	CONTROLLERATE OF INSPECTION (HEAVY VEHICLES) AVADI	
TCD		TOLERANCE ON DIMNS UNLESS OTHERWISE STATED	TITLE :- GOVERNOR LEVER	
APPD				
DATE	6/3/87	ALL THREADS CONFORM TO	D S CAT NUMBER	DRAWING NUMBER CB 20-15-662-5

	DESIGNATION	DESCRIPTION	QTY	REMARKS
		TECHNICAL PAPERS		
	CD 20-15-662-5	GOVERNOR LEVER ASSY		
		ASSEMLY UNITS		
1	CB 20-15-665-5	GOVERNOR LEVER ASSY		
		PARTS		
2	20-15-603	LOCKING WIRE	1	
3	315-622-2	ROLLER	1	
4	315-635-1	STOP PIN	1	
5	327-96-1	TAPPET WASHER	2	
6	353-07-1	BRIGHT WASHER 10	2	
		STANDARD ARTICLES		
7		ROLLER 2.5 X 13.0 II	15	COMMERCIAL
		GOCT 6870-72		
	(NOTE FOR THE 7. NUMBER)	ETY 500-65		

ISSUE	DATE	NATURE OF AMENDMENTS	ISSUE	DATE	NATURE OF AMENDMENTS

DRN		USED ON CB 20-27-00-4	
CHD		CONTROLLERATE OF INSPECTION (HEAVY VEHICLES) AVADI	
TCD		TITLE GOVERNOR LEVER ASSY	
APPD.		D S CAT NUMBER	ITEM LIST FOR CB 20-15-662-5
DATE 7-05-87	SHT No 1 OFF 1		

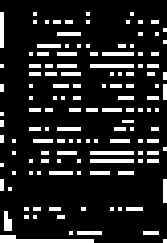

DRAWING NUMBER
315-636-1

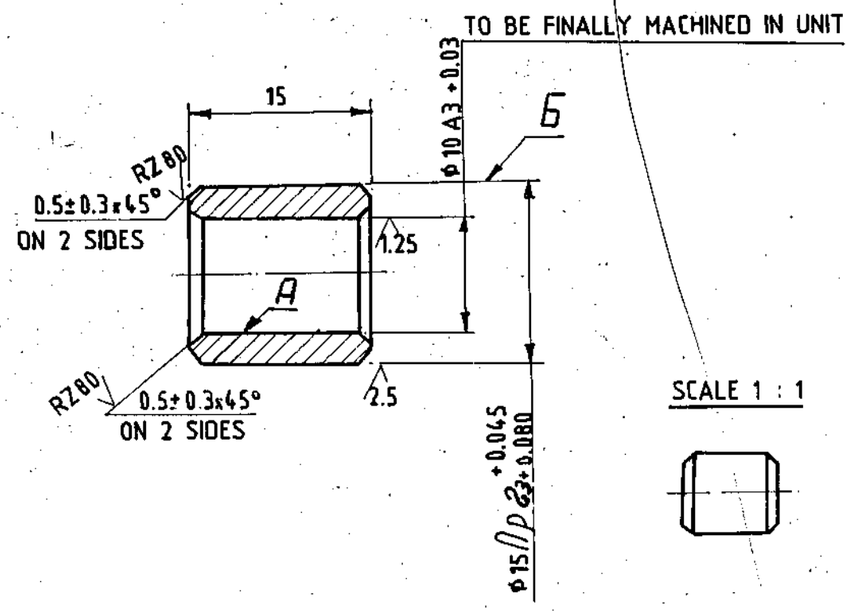

1. DIMENSIONS WITH UNSPECIFIED DEVIATIONS SHOULD BE OBTAINED AS PER ACCURACY CLASS 7 OST 1010.

2. RUN-OUT OF SURFACE Б RELATIVE TO SURFACE A SHOULD NOT EXCEED 0.05mm.

EXPLANATORY NOTE:

MATERIAL QUOTED: ЛC 59-1 GOST 15527-70
ЛC 59-1 GRADE OF BRASS

CHEMICAL COMPOSITION (AS PER GOST 15527-70) %

COPPER	: 57.0 - 60.0
LEAD	: 0.8 - 1.5
ZINC	: REMAINDER

ADMIXTURES

IRON : 0.5 (MAX)	ANTIMONY : 0.010 (MAX)
BISMUTH : 0.003 (MAX)	PHOSPHORUS : 0.02 (MAX)
TIN : 0.30 (MAX)	TOTAL : 0.75 (MAX)

PILOT SAMPLE SHOULD BE APPROVED BY A H S P BEFORE BULK PRODUCTION

EST WT 0.012 Kg	TO BE STAMPED OR MARKED WHERE INDICATED THUS # (LETTERS)

ALL SHARP EDGES AND CORNERS TO BE REMOVED UNLESS OTHERWISE STATED MACHINED CORNERS TO HAVE R OUTSIDE R INSIDE EQUIVALENT CHAMFERS ARE PERMISSIBLE

ISSUE	DATE	NATURE OF AMENDMENTS

DRN		MATERIAL BRASS ЛC 59-1 GOST 15527-70
CHD		USED ON: СБ 20-15-665-5 СБ 315-665
TCD		
APPD		CONTROLLERATE OF INSPECTION (HEAVY VEHICLES) AVADI
DATE	08-5-'86	
SCALE 1 : 1		
DIMENSIONS IN mm		TITLE VARIABLE SPEED GOVERNOR LEVER BUSHING
TOLERANDE ON DIMNS UNLESS OTHERWISE STATED		
ALL THREADS TO CONFORM TO		D S CAT NUMBER
		DRAWING NUMBER 315-636-1

KVD No. 63490

A6
SIZE A3

ZONE	ITEM NO	DESIGNATION	DESCRIPTION	QTY	REMARKS
			Technical papers		
		cb 20-15-665-5	GOVERNOR LEVER ASSY.		
			Assembly units		
	1	cb 20-15-607-1	Governor lever ASSY	1	
	2	20-15-632	Spring pin	1	
	3	315-636-1	Governor lever bushing	2	

ISSUE	DATE	NATURE OF AMENDMENTS	ISSUE	DATE	NATURE OF AMENDMENTS

DRN		USED ON Cb 20-15-662-5	
CHD		CONTROLLERATE OF INSPECTION (HEAVY VEHICLES) AVADI	
TCD		TITLE GOVERNOR LEVER ASSY	
APPD		D S CAT NUMBER	ITEM LIST FOR CB 20-15-665-5
DATE 7.05.87	SHT No 1/OFF 1		

CБ 20-15-665-5

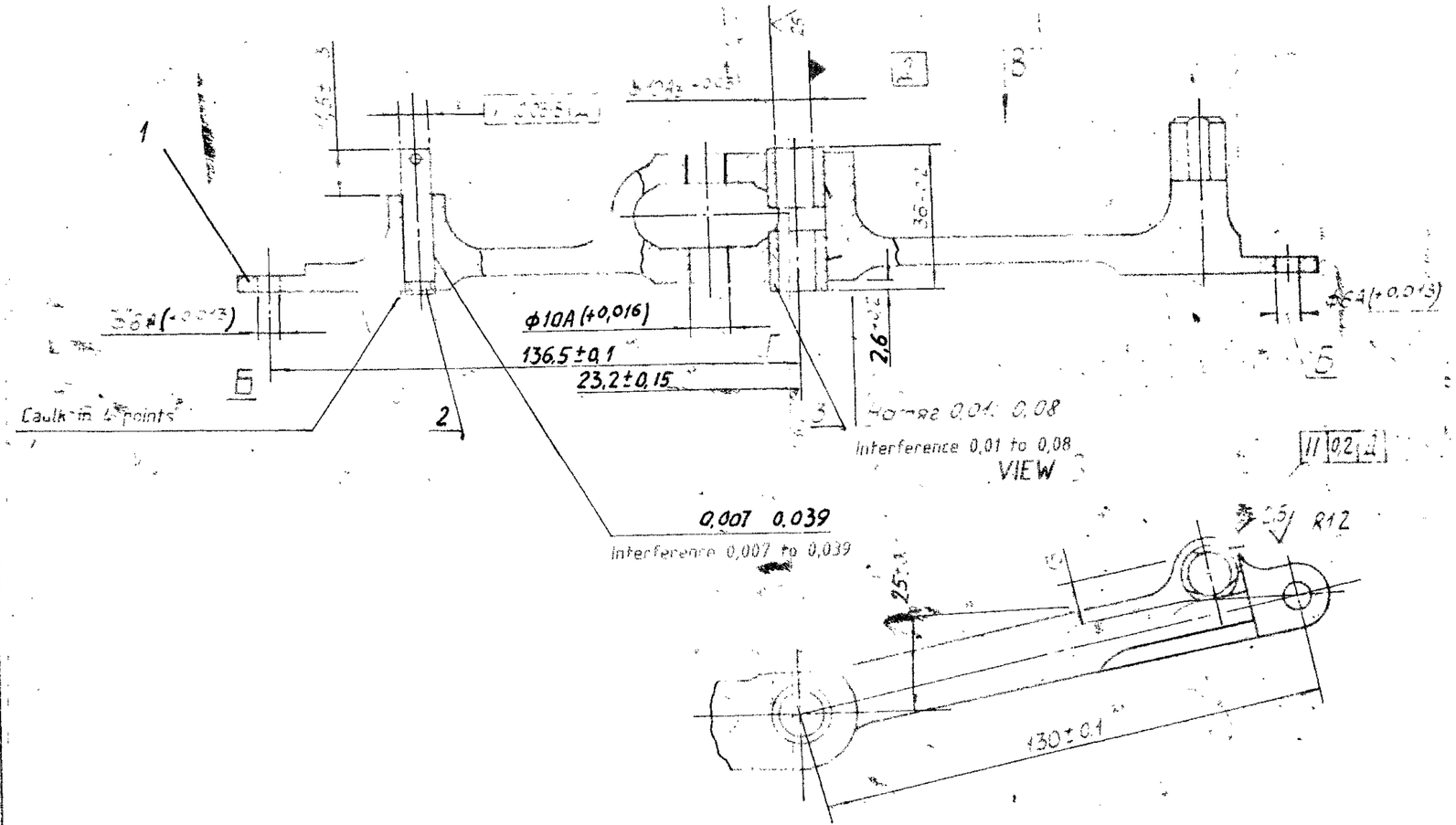

With respect to the axis
- non-parallelity
axis of holes F should
the length of 50 mm.
-non-parallelity and misalignment of
holes Б should not exceed 0,25 mm
length of 50 mm (qualified toleran

PILOT SAMPLE SHOULD BE APPROVED BY A H S P BEFORE BULK PRODUCTION

ISSUE	DATE	NATURE OF AMENDMENTS	
DRN		SCALE :- 1 : 1	
CHK		DIMENSIONS IN mm	
		TOLERANCE ON DIMNS UNLESS OTHERWISE STATED	
APPD			
DATE	6/3/57	ALL THREADS UNIFORM TO	

EST. MASS 0,449 Kg

TO BE STAMPED OR MARKED WHERE INDICATED THUS (LETTERS)

ALL SHARP EDGES AND CORNERS TO BE REMOVED UNLESS OTHERWISE STATED MACHINED CORNERS TO HAVE OUTSIDE R INSIDE EQUIVALENT CHAMFERS ARE PERMISSIBLE

MATERIAL :- ——

USED ON :- CБ 20-15-662-5

CONTROLLERATE OF INSPECTION (HEAVY VEHICLES) AVADI

TITLE :- GOVERNOR LEVER

D S ZAT NUMBER

DRAWING NUMBER CБ 20-15-665-5